BIOGAS TECHNOLOGY IN NEPAL:

A Sustainable Source of Energy for Rural People

Govinda Prasad Devkota

Published by:

Mrs. Bindu Devkota
Maipee, Kathmandu

Printed at:

Suprada Printers
Chhauni, Kathmandu, Nepal

August 2001

DEDICATION

THIS BOOK IS DEDICATED TO THE FOND MEMORY OF MY FATHER LATE SHRI *MADHAV PRASAD DEVKOTA*

CONTENTS

1. BACKGROUND..... 1

2. HISTORY OF DEVELOPMENT..... 6

2.1 BIOGAS IN NEPAL..... 6
2.2 BIOGAS IN INDIA..... 10
2.3 BIOGAS IN CHINA..... 11
2.4 BIOGAS IN OTHER COUNTRIES..... 12

3. USES OF BIOGAS AND BIO-SLURRY 13

3.1 USES OF BIOGAS 13
3.2 USES OF BIO-SLURRY..... 16

4. GOBAR GAS COMPANIES..... 21

5. FACTORS AFFECTING BIOGAS PLANTS 25

6. ACHIEVEMENTS AND CHALLENGES..... 30

6.1 BIOGAS INSTALLATION 30
6.2 APPLIANCES MANUFACTURING..... 37
6.3 TRAINING..... 47

7. DESIGNS OF BIOGAS PLANTS..... 52

7.1 FLOATING STEEL DRUM DESIGN..... 52
7.2 FIXED DOME DESIGN 53
7.3 TUNNEL DESIGN..... 61

8. BASIC PRINCIPLES FOR INSTALLATION OF THE FIXED DOME BIOGAS PLANTS..... 62

9. ECONOMICS OF BIOGAS PLANTS 66
9.1 COST OF THE PLANTS..... 66
9.2 SAVING AND EXPENDITURE 68
9.3 PAYBACK PERIOD..... 68
10. QUALITY MANAGEMENT OF THE PLANTS..... 69
11. SLURRY EXTENTION PROGRAMME..... 71
12. BIOGAS RESEARCH AND DEVELOPEMNT 73
12.1 DESIGNS OF BIOGAS..... 73
12.2 APPLIANCES DEVELOPMENT..... 81

12.3 ALTERNATIVE FEED..... 81
12.4 APPLICATION OF SLURRY..... 84
12.5 GOBAR BATTERY..... 85
12.6 METHODS OF INCREASING GAS PRODUCTION..... 86
12.7 COLD CLIMATE AND HIGH ALTITUDE BIOGAS PLANT.. 90
12.8 TESTING THE EFFICIENCY OF BIOGAS BURNER..... 90

13. INSTITUTIONAL DEVELOPMENT..... 91

13.1 ADB/N..... 91
13.2 UMN..... 91
13.3 TIMBER CORPORATION OF NEPAL/ NEPAL FUEL CORPORATION 92
13.4 NEPAL BIOGAS PROMOTION GROUP AND OTHER NGOS..... 92
13.5 DONOR AGENCIES..... 93
13.6 HMG/N..... 94
13.7 BIOGAS COMPANIES..... 96
13.8 MANUFACTURERS OF BIOGAS APPLIANCES..... 96

14. SERVICES PROVIDED BY BIOGAS COMPANIES..... 98

15. REASONS FOR THE SUCCESS OF THE BIOGAS PROGRAMME.. 101

16. CONCLUSIONS..... 103

17. ANNEXES..... 106

ANNEX 1: DRAWING OF LATRINE CONNECTION TO BIOGAS PLANTS..... 106
ANNEX 2: DRAWING OF CARBURETTOR..... 107
ANNEX 3 (a): DRAWING OF BIOGAS MILL INSTALLATION PLANNING..... 108
ANNEX 3 (b): DRAWING OF BIOGAS MILL INSTALLATION PLANNING..... 109
ANNEX 4: DRAWING OF 50 CUM STRETCHED DOME PLANT 110
ANNEX 5: DRAWING OF 75 CUM STRETCHED DOME PLANT 111
ANNEX 6: DRAWING OF 100 CUM STRETCHED DOME PLANT 112
ANNEX 7: DRAWING OF JANATA AND DEENBANDHU MODEL BIOGAS PLANTS..... 113
ANNEX 8: DRAWINGS OF CHINESE AND KVIC MODEL BIOGAS PLANTS..... 114

18. REFERENCES..... 115

List of Tables and Figures

Tables:

Table 1: Nutrient contents in bioslurry and gobar (dung)
Table 2: Yielding of crops by using various fertilizers
Table 3: Yielding of wheat by using various fertilizers
Table 4: List of recognized biogas construction companies
Table 5: Gas production at various digester temperatures
Table 6: C: N ratio of various feeding materials
Table 7: Feeding rate of fixed dome design biogas plants
Table 8: Some possible problems of biogas plants and their solutions
Table 9: List of community biogas plants
Table 10: Number of local masons trained by GGC
Table 11: Size, volume and gas production of floating drum plant
Table 12: Size, volume and gas production of fixed dome plant
Table 13(a): Design calculation for existing biogas plants
Table 13(b): Design calculation for 5, 7, 9 and 12 cum dome plant
Table 14: Cost of various sizes of fixed dome plants
Table 15: Cost of 8 cum biogas plant
Table 16: Construction materials and labour cost for 8 cum plant
Table 17: Gas production from different feed stock
Table 18: Methane percentage from various feed stocks
Table 19: Manure applied and respective yielding of cereals
Table 20: Manure applied and respective yielding of vegetables
Table 21: Increased in gas production after composting
Table 22: Increased in gas production after using heat exchanger
Table 23: Biogas installation after BSP
Table 24: Biogas appliance manufacturers and suppliers

Figures:

Figure 1: Map of Nepal
Figure 2: Biogas installation
Figure 3: Diagram of vertical mixer machine
Figure 4: Diagram of stove

Figure 5: Diagram of main gas valve
Figure 6: Diagram of gas tap
Figure 7: Diagram of lamp
Figure 8: Diagram of water drain
Figure 9: Diagram of fixed dome plant
Figure 10: Diagram of floating drum plant
Figure 11: Diagram of fixed dome design biogas plant with curvature bottom
Figure 12: Diagram of tunnel design biogas plant
Figure 13: Diagram of 750 & 1000 cft drum plant
Figure 14: Diagram of 50 cum dome plant

Photoes:

Photo 1: Cooking food on biogas
Photo 2: Biogas lamp
Photo 3: Brick wall and stone wall dome design biogas digester
Photo 4: Toilet attached biogas plant
Photo 5: 500 cft Floating drum plant
Photo 6: Parts of Horizontal mixing machine
Photo 7: Participation in the International Biogas Training Course in China
Photo 8: Nepalese participation in International Biogas Workshop in Germany
Photo 9: Nepalese participation in International Biogas Workshop in Sri Lanka
Photo 10:Nepalese participation in International Biogas Seminar in Lahore of Pakistan
Photo 11:200 cft floating drum plant
Photo 12:Stages of dome design biogas plant construction

Preface

This book is primarily a result of my work experience at the Gobar Gas Company, where I was involved in developing and disseminating biogas technology in rural areas of the country.

This book provides an overview on the development and dissemination of biogas technology, its uses and economics, present status and organisational involvement. It has focused on the findings of various research and development activities with basic principles for installation of fixed dome design biogas plants, quality management including the services provided by the biogas installation companies. It also points out and discusses the factors which contributed to the success of the national biogas programme in Nepal.

I hope this book will be useful to the companies, donors, professionals, researchers and the farmers, associated with the biogas sector.

Acknowledgement

I would like to extend my sincere thanks to all those who helped to publish this book: "Biogas Technology in Nepal: A Sustainable Source of Energy for Rural People". Special thanks goes to Gobar Gas Company (GGC), where I could carry out the research on biogas technology development when I was working there (1980-1992).

I am indebted to my elder brother Mr. Krishna Prasad Devkota whose continuous encouragement and valuable suggestions enabled this book to materialize.

I am much grateful to Mr. Shuvakantha Sharma and Mr. Hriseekesh Upadhyay for their editorial assistance.

Finally, sincere thanks goes to my son Prajwal for computer setting, my daughter Pragya for designing the cover page and to other members of my family for their invaluable support.

Govinda P. Devkota
Maipee, Kathmandu
August 2001

ACRONYMS AND ABBREVIATION

AC	: Asbestos Cement
ADB/N	: Agriculture Development Bank of Nepal
AEPC	: Alternative Energy Promotion Centre
AEPDF	: Alternative Energy Promotion and Development Fund
AFPRO	: Action for Food Production
BCC	: Biogas Co-ordination Committee
BEW	: Butwal Engineering Works
BRTC	: Biogas Research and Training Centre
BSP	: Biogas Support Programme
BTI	: Butwal Technical Institute
CBO	: Community Based Organization
Cf.	: Cubic feet
Cum	: Cubic meter
DCS	: Development and Consulting Services
DM%	: Dry Matter Percentage
DoA	: Department of Agriculture
FAO	: Food and Agricultural Organization
GGC	: Gobar Gas Company
GI	: Galvanized Iron
H/Hs	: House Holds
HBB	: High Build Black
HDPE	: High Density Poly Ethylene
HMG/N	: His Majesty's Government of Nepal
HP	: HorsePower
Hr.	: Hour
ITDG	: Intermediate Technology Development Group
IED	: Industrial Enterprise Development
Kg	: Kilogram
KfW	: A German Bank Financing for Development Projects
KL	: Kiloliter
KVIC	: Khadi and Village Industries Commission
kW	: Kilowatt
Lit.	: Litre

MNES	: Ministry of Non-conventional Energy Sources
MoF	: Ministry of Finance
MS	: Mild Steel
MT	: Metric Ton
MW	: Mega Watt
NBL	: Nepal Bank Limited
NPBD	: National Project on Biogas Development
NBPG	: Nepal Biogas Promotion Group
NFC	: Nepal Fuel Corporation
NGO	: Non-Governmental Organization
NPC	: National Planing Commission
O & M	: Operation and Maintenance
PRAD	: Planning, Research and Action Division
PV	: PhotoVoltaic
R & D	: Research and Development
RBB	: Rastriya Banijya Bank
REDP	: Rural Energy Development Programme
Rs	: Rupees
SATA	: Swiss Association for Technical Assistance
SCC	: Slurry Co-ordination Committee
SEP	: Slurry Extension Programme
SEPP	: Slurry Extension Pilot Project
TCN	: Timber Corporation of Nepal
TERI	: Tata Energy Research Institute
UMN	: United Mission to Nepal
UNCDF	: United Nations Children's Development Fund
UNDP	: United Nations Development Programme
USAID	: United States Agency for International Development
VDC	: Village Development Committee
WECS	: Water and Energy Commission Secretariat

1. Background

Nepal is a small country with an area of 147,181square kilometers and total population of about 23.4 million people. The number of households is estimated at 3.68 million and about 68 percent of the population resides in rural areas. It is located in between two big countries, China to the north and India to the east, west and south.

Energy sources in Nepal can be broadly categorised into three groups such as traditional biomass energy, commercial non-biomass energy and alternative energy. Traditional energy includes fuelwood, agricultural residue and animal waste. Commercial energy comprises electricity, petroleum products and coal. Alternative energy sources include biogas, hydropower, solar and wind energy.

Biogas technology is one of the most trusted and popular alternative energy sources used for cooking and lighting particularly in rural Nepal. The development and dissemination of biogas technology in Nepal was started mainly after the establishment of Gobar Gas tatha Krishi Yantra Vikash Company Pvt. Ltd. in 1977.

Regarding renewable energy technology dissemination about 80,000 biogas plants have been installed in the country till July 2001. Similarly about 10 MW power have been generated from 1200 mini and micro-hydro schemes, about 30 PV water pumps, 5,000 PV home systems and slightly over 110,000 improved cooking stoves have been disseminated all over the country. The energy consumption is estimated at about 79 percent from fuelwood, nine percent from fossil fuel, six percent from animal dung, four percent from agri-residue, one percent from biogas and one percent from electricity. The cost involved in the installation of biogas plant is estimated at Rs 2500-5000 per cum., micro-hydro at Rs 120,000 - 150,000 per kW and solar PV at Rs 900 per watt depending on the site and size of the scheme.

Figure 1: Map of Nepal

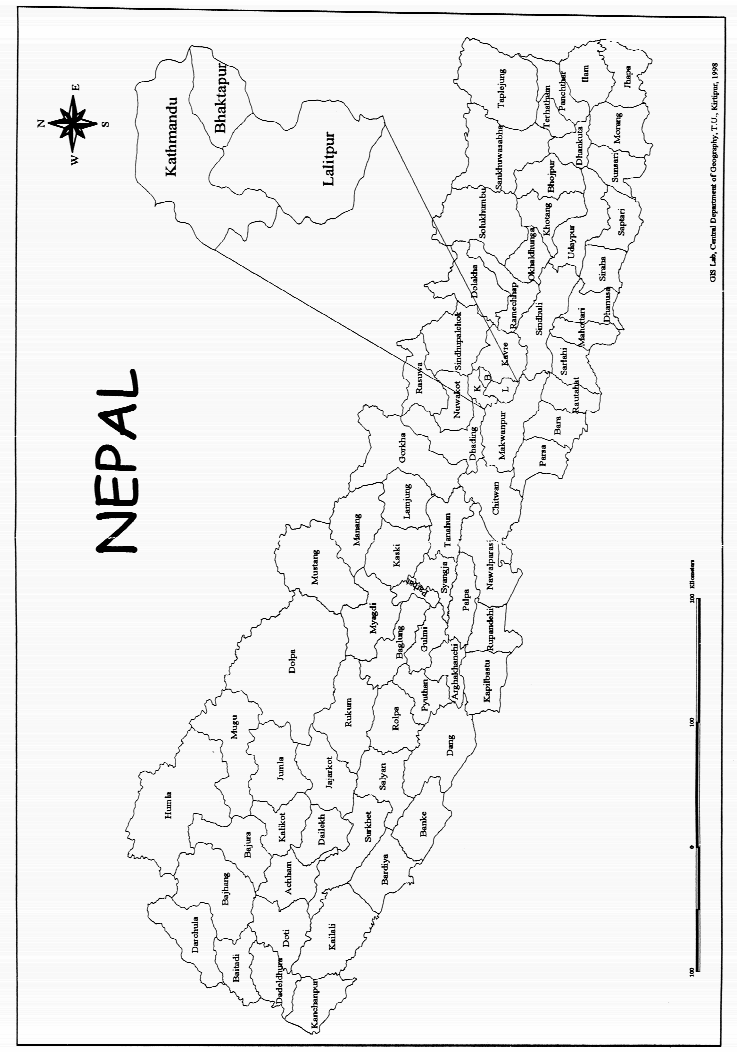

There are a total of 932 floating drum design biogas plants ranging from 100 cft. to 1000 cft. gas production capacity per day. These are mostly of taper design with central dividing wall with a hole leading to central guide pipe as gas outlet. There are about 79,000 fixed dome design biogas plants. Previously scum breaker was fixed inside the digester and the floor was of curvature, which was changed to flat bottom in 1990. These plants are of 4 to 50 cu. m. digester volumes. There was some tunnel plants of about 100 where the roof was made of concrete arch pieces lined with plastic sheeting.

As more and more companies are entering in the field of biogas, there is competition among the companies to find and develop their own market segments and promotion strategies to commercialize biogas technology in the country. Promotion activities are also being done by other non-governmental organizations.

Basic Information on Biogas

Biogas is a mixture of different gases such as methane (50-65%), CO_2 (30-40%), hydrogen sulfide (less than 1%) and other gases such as nitrogen, hydrogen, carbon monoxide in traces. Biogas consists of water vapour, which needs to be removed through a device known as water drain.

Biogas is flammable gas produced by microbes when organic materials are fermented in a certain range of temperature and moisture contents. It acidifies under airtight conditions. The main component of biogas is methane, which is represented as CH_4 symbolically. It is colourless, odourless and tasteless but due to the presence of other gases, it has slight smell of garlic or rotten eggs. The specific gravity of biogas is 0.86.

The production of biogas occurs in two stages:

i. Bacteria breakdown complex organic materials
ii. Organic materials and CO_2 are either oxidized or reduced to CH_4 by methanogenic microorganism. It undergoes the following reactions:

Acid break down into CH_4

$2CH_3CH_2OH + CO_2 \longrightarrow {}_2O + 5CH_4 + 3\ CO_2$

Oxidation of ethanol by CO_2

$2CH_3CH_2OH + CO_2 \longrightarrow 2CH_3COOH + CH_4$

Reduction with H_2

$CO_2 + 4\ H_2 \longrightarrow CH_4 + CO_2$.

In this way methane is formed from fermentation of animal wastes or any cellulosic organic materials. For fermentation several conditions such as air tightness, suitable temperature, necessary nutrients, water contents, maintaining a suitable pH balance should be met.

There are three types of fermentation:

i. Continuous process
ii. Batch process
iii. Plug flow process

In the continuous process, the substrate or feed should be continuously added and at the same time slurry will come out from the other end continuously. In the batch process one can predict the behaviour of a continuous culture. It has three stages such as: exponential, stagnant and death phase. The plug flow process is the same as tunnel type where dung is plugged.

In the aerobic decomposition of organic matter, the main gas evolved is CO_2. At low oxygen tension, appreciable methane is released in the degradation of cellulose, proteins, organic acids and alcohol. CH_4 producing bacteria are the source of energy for growth. Methane formation is also influenced by acidity. The maximum rate occurs in environments of near neutral pH as there is little acidity below pH 6.

Methane forming bacteria have many physiological properties in common, but these are heterogeneous in cellular morphology. Some are rods, some cocci while others occur in clusters of cocci known as sarcinae. All methane forming bacteria are grouped into a single family Methanobacteriaceae with three species as Methano coccus, Methano sarcina and Methano spirillum.

A variety of reactions can lead to the evolution of methane in O_2 depleted environments.

$$CO_2 + 4H_2 \rightarrow CH_4 + 2H_2O$$
$$4HCOOH \rightarrow CH_4 + 3CO_2 + 2\ H_2O$$
$$CH_3COOH \rightarrow CH_4 + CO_2.$$

Most of the population of Nepal resides in the semi-tropical region and the energy needs of rural population are for cooking and lighting. The need is met mostly by firewood and dung cakes. Use of firewood results in deforestation and use of dung burns valuable fertilizer. These problems can be overcome by installing a biogas plant. But in order to find wider acceptance of the technology, the speed of digestion must be increased and the type of bacteria enabling this must be developed to attack cellular materials in the cattle dung. The methanogenic bacteria are more effective at temperature about 30 - 35 degree Celsius.

2. History of Development

2.1 Biogas in Nepal

The pioneer of biogas in Nepal was late Father B. R. Sauboll, a Belgian teacher at Godavari St. Xavier's School, who built a demonstration plant in 1955. In 1968 Khadi and Village Industries Commission (KVIC), India built a plant for an exhibition at Kathmandu. During the agricultural year 1974/75, the Department of Agriculture set a programme to install 250 floating drum design biogas plants and Agriculture Development Bank of Nepal (ADB/N) provided interest free loan. In 1974, Development and Consulting Services (DCS) built four floating drum plants of KVIC design. Gobar Gas and Agriculture Equipment Development Company P. Ltd. (GGC) was formed in 1977 with the joint investment of the United Mission to Nepal (UMN), Agriculture Development Bank (ADB/N) and Nepal Fuel Corporation under the DCS biogas extension programme. As it was difficult to introduce a new technology, i.e. biogas in rural areas, the programme made by this company was not so encouraging in comparison to the national potentialities. However, research on various design of biogas plants such as floating steel drum design, concrete fixed dome design, pre-casted tunnel design, plastic bag biodigester, ferrocement gas holder, brick mortar dome, mud dome were tested and experimented. Fixed dome design, a Chinese modification plant was introduced in Nepal in 1980. After several modifications, fixed dome design (GGC model 1990) was the only recognised design and it became more popular in Nepal.

During the period of 1981 to 1986 GGC developed and tested various designs of biogas plants such as floating

drum design, fixed dome design, tunnel design, plastic bag biodigester and so on. Similarly various types of biogas appliances such as gas pipes, mixer machines, gas taps, stoves, lamps, water drains, gas meter, agitator, manometers were developed, modified and tested. On the other hand, experiments with various alternative feed stocks such as *Eupatorium* species, water hyacinth, night soil and rice straw were experimented. Slurry coming from the plant was applied to various crops both vegetables and cereals. It was also used for feeding fish and animals. However, most of the research on the subject was limited to experiments and papers.

Research was also conducted on the application of gas for running engines for agro-processing, pumping water for irrigation and generating electricity especially on community basis. Until 1986, Gobar Gas Company had installed 60 such plants. But due to some social problems such as unequal contribution of dung in comparision to the family members, leasing agro-processing mills on rotation basis by the family members (less wear and tear in the first years and more in the later years) most of these are not in operation these days.

Presently, a total of more than 50 gobar gas companies have been established mostly by the people, who were associated, the parent organisation, the GGC. In 1992 Biogas Support Programme was introduced at three different stages for wider dissemination of the technology in thecountry. In 1995, Nepal Biogas Promotion Group (NBPG) was established as an umbrella organisation for all the construction companies for the promotion and extension of the programme. In 1996, His Majesty's Government of Nepal (HMG/N) set up Alternative Energy Promotion

Centre (AEPC) under the Ministry of Science and Technology. The role of AEPC is the networking at central level for the policy making.

Currently 49 biogas plants installation companies and 16 manufactures have been recognised by BSP for the installation and supply of biogas appliances respectively. As a result, about 80,000 biogas (about 12,000 plants were installed before BSP) plants mostly of fixed dome types have been installed in 66 districts of the country. Although about 90 percent of the plants installed in Nepal have a provision for toilet connection in the future, only about 60 percent of these have been attached with toilet already. It is believed that burning biogas is much cleaner than burning biomass and the toilets are much safer than using the open ones.

It is estimated that about 90 percent of these plants are functional and are used on a regular basis producing about 40 million cum biogas annually. It is also estimated that one 6 cum biogas plant displace the use of 3 tonnes of fuelwood or 38 lit. of kerosene annually. It is also calculated that it produced 27 tonnes of digested slurry and reduces 4.2 tonnes of carbondioxide equivalent per year. This shows the saving of 11.6 trees annually (i.e. 0.055 ha. of forest).

On this basis, a comparative analysis was made on firewood consumption before and after biogas installation and the result showed the firewood savings. It has been estimated that the operational biogas plants are estimated to displace the use of about 200 thousand tonnes of fuelwood and 2.5 million litres of kerosene annually. This would result in a net reduction of approximately 300 thousand tonnes of carbondioxide equivalent annually. This will help in

savings of about 25 thousand tonnes of carbondioxide equivalent per annum.

It has also been estimated that with the introduction of biogas, the national biogas programme has contributed to reduce the consumption of 27 hundred thousand lit. of kerosene by about 80 thousand H/Hs. This has saved an outflow of NRs 4.5 million in a year assuming the price of kerosene at Rs 17 per lit.

The application of the slurry from the biogas plants and their impact on agricultural production both on cereal and vegetables could not be quantified. However, it has been estimated that about 10 - 15% agricultural production could be increased with proper composting and application of the slurry in the field. It also helps in improving the texture and structure of soil condition. On top of that it reduces the consumption of chemical fertiliser.

Similarly it is calculated that saving of live trees due to installation of biogas plants in the programme districts were estimated at about 869,000 soft trees of various species per annum. This is calculated on the basis that about 3.0 MT of firewood is received from one tree.

Temporary as well as permanent toilets installed in the H/Hs have helped in improving the environmental sanitation in the area. Similarly construction of compost pit has also helped to improve the environment in the programme areas.

It is also realised that after the establishment of about 50 biogas companies and installation of biogas plants, the drudgery reduction was noticed in the biogas VDCs, even though it could not be quantified.

Several activities were carried out under Research and Development of biogas for which the following team was involved in the Research and Development Unit of GGC at Butwal (1978- 1991).

- Mr. Govinda P. Devkota, Biogas Research Scientist, GGC, R & D.
- Mr. Nick Peter, DCS, (partly working as Consultant in GGC, R & D)
- Mr. John Finely, DCS, (partly working as Consultant in GGC, R & D)
- Dr. David Fulford, DCS, (partly working as Consultant in GGC, R & D)
- Dr. Mamie Wang, DCS, (partly working as Consultant in GGC, R & D)
- Mr. Andrew Bulmer, DCS.
- Mr. Wim van Nes, Research Officer, GGC, R&D
- Mr. Jan Lam, Production Engineer, GGC, Workshop
- Mr. Kamal Dahal, Production Manager, GGC, Workshop

Besides the full-fledged members as above, there were some support staff members including overseers, the laboratory technicians and helpers. Biogas research was independently carried out by GGC since 1980 after the recruitment of a biogas research scientist.

2.2 Biogas in India

Biogas programme in India was inspired by research carried out by the Indian Agricultural Research Institute at Delhi. Khadi andVillage Industries Commission (KVIC) in 1951, set up its national programmes and as a result Jashubhai Patel designed various phases of "Gram Laxmi" design biogas plant. Similarly, other agencies such as Planning, Research

and Action Division (PRAD) of the State Planning Institute of Uttar Pradesh in Lucknow, Action for Food Production (AFPRO), a voluntary organization based in New Delhi have built Janata Model Biogas Plant (Annex 7) and trained several masons for the construction of this design. Later Deenbandhu Biogas Plant (Annex 7) were designed and installed in the country. It has played a leading role in the field level implementation of biogas technology in India.

The Tata Energy Research Institute (TERI) is another organization involved in research and development of the technology and has published several reports in this field. TERI has developed a low cost biogas plant made of bamboo. The biogas programme in India further gained momentum with the establishment of Ministry of Non-conventional Energy Sources (MNES).

Biogas technology has been in use in India for nearly a hundred years. However, its dissemination began in a concerted manner only in 1981. With the launching of the National Project on Biogas Development (NPBD) about 2.5 million family size biogas plants were installed in the country. Similarly various large number of NGOs such as Sulav International, Gram Vikash, Aga Khan Rural Support Programme, Centre of Science for Villages, and several other institutes and universities have played a major role in promoting biogas in the country.

2.3 Biogas in China

After the communist take-over, Chairman Mao introduced biogas as part of the Great Leap Forward in the 1950s. Government cadres in the Communes mobilized local people to build their own biogas units.

The Communes were set up at the basic administrative structure in rural China. Although a large number of biogas plants were built in the past, their reliability was not assured and many of these did not function well.

Local people's groups in Sichuan Province revived the biogas programme in the 1970s, apparently spontaneously. New design (Annex 8) was developed after some modification and has been functioning well. Biogas Research and Training Center (BRTC) have been established for the research and to provide training to people on biogas technology. It provides courses for international participants on design and construction of biogas plants.

There is a growing interest in extending the scope of biogas technology such as using gas from sewage, integration of biogas with agriculture, fisheries, mushroom cultivation, earthworm production. Similarly the gas is used not only for cooking and lighting but also for running vehicles.

2.4 Biogas in other countries

Many other countries in the world have now produced biogas, but in different ways and for different reasons. Western nations are keen to develop a biogas system for their farmers as an alternative energy source to suit their colder climates. But their systems are highly mechanized and capital intensive.

Among the developing nations, China, India, Nepal and Korea have large scale programme to popularise biogas plants. Similarly biogas programme were introduced in other countries such as the Philippines, Thailand, Taiwan, Canada, UK, Germany, the Netherlands, Sri Lanka, Bangladesh and in some

African countries. These countries have made a general recommendation that more systematic research is required, especially in the long-term provision of different designs specific to the field conditions.

3. Uses of Biogas and Bio-slurry

3.1 Uses of Biogas

As explained earlier, biogas is a mixture of different gases such as methane (50-60%), Carbondioxide (30-40%), hydrogen sulfide (less than 1%) and other gases such as nitrogen, hydrogen, carbon monoxide in tresses. Biogas is a wet gas because it picks up water vapor from the slurry. Biogas is a flammable gas produced by microbes when organic materials are fermented in a certain range of temperature, moisture contents under anaerobic conditions. The main component of biogas is methane, which is colorless, odorless and tasteless, but due to the presence of other gases it gives slight smell of garlic or rotten eggs.

Methane is formed from the fermentation of animal waste or any other cellulose organic materials such as decaying vegetables, straw and so on. However, for this to work certain conditions such as air tightness, suitable temperature, necessary nutrients, water contents, and maintaining suitable pH balance must be maintained.

Since biogas is a high quality fuel, it can be used for many purposes including cooking, lighting, running dual fuel engine, agro-processing, pumping water and generating electricity. A brief description of each use is given below:

a. Cooking

The main use of biogas, at present, is for domestic purposes, such as cooking and lighting. Biogas can be used with suitably designed burners to give a clean, smokeless, blue flame,

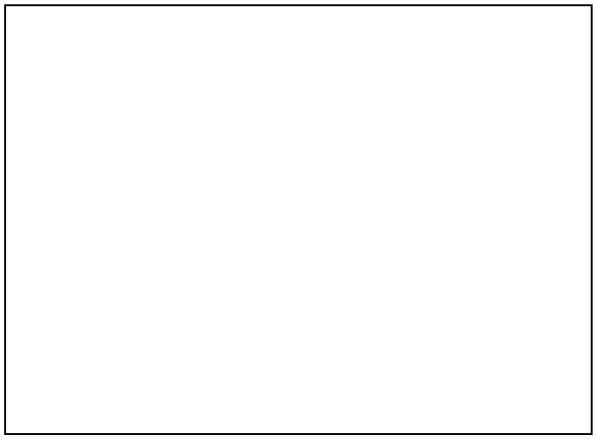

Photo 1 : Cooking food on biogas

which is ideal for cooking. It has been estimated that more than 87 percent of the people in Nepal use firewood for cooking. If the trend continues all forest will disappear in less than 25 years. It is believed that biogas will help in reducing deforestation as majority of the biogas owners use the gas for cooking.

As mentioned earlier, after installation of biogas, firewood consumption has been greatly reduced. A comparative analysis was made on fuelwood consumption before and after biogas installation. This showed savings of firewood after biogas installation. A study conducted by REDP in 2000 has shown that roughly this saves about 64

percent of the firewood consumption after installation of about 800 biogas plants.

b. Lighting

About 85 percent of the Nepalese people in rural settlements use kerosene for lighting lamps. Nepal has no indigenous sources of kerosene. As such the country has to spend scarce foreign

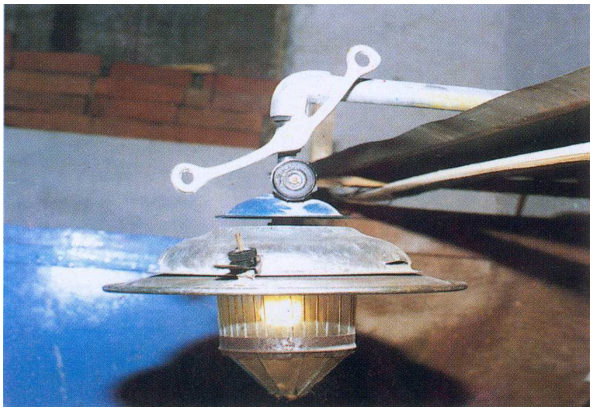

Photo 2: Biogas lamp

exchange on the import of kerosene and supplies are often unpredictable. Biogas owners especially in the hills where there is no electricity prefer the use of biogas facilities for lighting.

It has been estimated that the installation of biogas in the 80 thousand H/Hs has contributed to reduce the consumption of 27 hundred thousand lit. of kerosene as mentioned earlier. This has saved an outflow of Rs 4.5 million a year assuming the cost of kerosene at Rs 17 per lit.

c. Operating dual fuel engines

Biogas is a high-grade fuel, which means that it can be used in internal combustion engines. It is more usual to use it in dual-fuel engines which are adopted diesel engines that still use 30-40 percent diesel along with 60-70 percent biogas to provide ignition. The gas is connected with the engine by a simple device known as carburettor.

It has been estimated about 70 percent of diesel requirements can be replaced by biogas for running dual fuel engines which can be used for running agro-processing equipment, pumping water for irrigation and generating electricity. Biogas mill installation planning is shown in Annex 3(a) and (b)

d. Running boilers, refrigerators and vehicles

The dual-fuel engines can also be used for boilers, refrigerators, milk chilling plants and running vehicles.

3.2 Uses of Bio-slurry

The uses of slurry for various purposes can be summarised as follows:

a. Fertilizer

Fertilizer is an essential input for any crop. The slurry is rich in various plant nutrients such as nitrogen, phosphorous and potash. Well-fermented biogas slurry improves the physical, chemical and biological properties of the soil resulting qualitative as well as quantitative yield of food crops. Nitrogen remains in the effluent

of biofertilizer from the slurry, while some escapes as ammonia gas. When the effluent is dried, most of the nitrogen is lost.

Slurry from the biogas plant is more than a soil conditioner, which builds good soil texture, provides and releases plant nutrients. The following table 1: shows the nutrient contents present in biogas slurry and gobar. This was analyzed in Khumaltar Laboratory in Kathmandu in mid 80s.

Table 1: Nutrient contents in bioslurry and gobar (dung)

Fertilizer	Nitrogen	Phosphorus	Potash
Biogas slurry	1.76%	2.07%	2.3%
Gobar	0.60%	1.30%	1.70%

It was found that the slurry from anaerobic fermentation of a biogas digester improved the physical and chemical properties of the soil. Since there are no more parasites and pathogens in the slurry, it is highly recommended for use in farming. The economic value of the slurry shows that investment can be gained back in three to four years' time if slurry is properly used.

In one of the experiments conducted by the author the comparative yieldings of crops (kg per square meter area) by using different fertilizers was found as follows:

Table 2: Yieldings of crops by using various fertilizers

Crops	Chemical	Bio-slurry	Chemical & bioslurry	Control
Potatoes	1.5	1.4	1.54	1.2
Onion	0.44	0.42	0.50	0.40
Cabbage	0.95	0.80	0.98	0.74
Lady's finger	0.35	0.34	0.36	0.30

Similarly the yieldings of wheat (kg per 200 square meter) was found as follows:

Table 3: Yieldings of wheat by using various fertilizers

Gobar	Chemical	Bioslurry	Control
11.5	17.3	12.9	8.8

In this way, slurry is highly recommended for farming and its uses should be diversified in feeding and fermentation.

b. Feeding fish and animals

Other uses of the slurry include putting it into ponds as feed for algae, water hyacinth, fish or ducks; using it in hydroponics, where plants are grown in a nutrient rich solution on a gravel bed or even using it as feed supplement for pigs and chickens. The author conducted an experiment in feeding slurry (about 15%) to the fishpond and about 200 fishes were harvested at the end of the experiment.

c. Mushroom cultivation

The slurry coming from the plants can also be used for mushroom cultivation. The slurry mixed with powder of rice straw or wheat straw, water, lime, urea, calcium super phosphate, powder of maize when put in a plastic bag with some seeds of mushroom and keeping in a room temperature of about 22-25 degree Celsius will be ready for cultivation within about six weeks. The author had conducted this experiment at Butwal in mid eighties.

d. Earthworm cultivation

The by-product received from mushroom cultivation can be used for feeding animals as well as for earthworm cultivation that is used for feeding chickens. This was observed at Sichuan Province of China in 1987 by the author.

e. Slurry for decomposing chlorophyll of the leaves

When the pulp leaves are immersed into the slurry, the chlorophyll gets decomposed leaving behind the skeleton of the leaves on which drawings of birds, animals, human figures can be drawn. They are attractive for souvenir for tourists. Thus it can help promote culture and arts on the one hand and on the other hand enhance income generation. One of the biogas owners Mr. Jhalak Thapa from Pokhara, in Kaski district had produced such leaflet in order to sell these in the markets.

f. Other advantages

- Environmental pollution control

  The national biogas programme has helped to reduce 4,896 MT of carbon production annually assuming that a total of 33,960 MT of firewood is saved annually (1MT of firewood spread saves about 0.25 MT of carbon production). Similarly it is calculated that installation of biogas plants in the programme districts have saved about 869,000 living trees of different species per annum. It makes important impact to retain green cover. This is calculated on the basis that about three MT of firewood is received from one tree.

- Environmental sanitation

  Temporary as well as permanent toilets installed in the programme areas have contributed for the improvement of environmental sanitation in the area. Similarly construction of compost pit has also helped improve the environment in the programme areas.

- Drudgery reduction

  After the implementation of national biogas programme, the drudgery reduction was noticed in the programme VDCs. It meant women and young girls did not have to go to the common forest to gather firewood and they did not have to spend too much time washing kitchen waves.

Thus, the clean energy technology has greatly improved the health, education and social status of the people especially women and girls in the programme VDCs.

4. Gobar Gas Companies

It was only from the FY 1974/75 that real interest in gobar gas was visible in Nepal. A Gobar Gas Development Committee was formed under the Energy Research and Development Forum atTribhuvan University. Initial successes encouraged the Agricultural Department of HMG/N and the Agriculture Development Bank to plan for 250 plants for the agricultural year 1974/75. However, only 196 plants were actually installed by various contractors under the direction of the Department of Agriculture. Of these contractors, DCS built 95 plants and helped with 14 others, using drum supplied from Butwal Technical Institute's (BTI's) metal shop (presently known as BEW - Butwal Engineering Works). The Agricultural Tools Factory in Birgunj and the Balaju Yantra Shala in Kathmandu supplied other gas drums.

Gobar Gas tatha Krishi Yantra Vikash P. Ltd. (in short GGC) was formed in 1977 with the capital finance from the United Mission to Nepal (Rs 300,000), Agriculture Development Bank (Rs 200,000) and the Fuel Corporation of Nepal (Rs 200,000). Most of the staff members of the company were Nepalese, while the Executive Director was an expatriate. DCS retained the research and development side of the programme, offering technical back up to the staff of the company. Responsibility for the research and development was handed over to the company in 1981 only after setting up a laboratory and forming a research team.

The main objectives of establishing GGC were as follows:

- to install biogas plants of various sizes and designs in the potential areas as per the needs of the users;
- to make the biogas appliances such as stove, gas pipe, gas valve, gas taps etc easily available;
- to develop trained manpower for biogas construction as well as maintenance and operation of the system;
- to carryout problem oriented research in the effective and efficient utilization of biogas technology;
- to develop low cost biogas models for smooth implementation of biogas programme in the country;
- to help in the development of sound environment and ecology of the nation; and
- to provide necessary consultancy services in the field of biogas technology and alternative energy development.

The company set up branch offices in various strategic places in Nepal, mainly in the Terai, as transportation was far more difficult in the Hills. By the middle of 1987 the company had built over 2,300 biogas plants in the country. Even after eight years of trading, the Company could not make a profit. Rapid expansion resulted in technicians who had only been trained to supervise the building of biogas plants being promoted to area managers, supervisors, accountants, storekeepers and foremen. Field staff were given motor bike in 1983 and received on the job training.

The company faced the problems of shortage of basic commodities such as cement and steel. Similarly political disturbances during its initial stage caused problems for the commercialization of the technology. The company offered guarantee and follow-up programme and the records indicate that about 90 percent of all plants built by the company continue to work. Should the plants fail due to poor

workmanship, the company provided services or even installed a new plant free of cost.

DCS attempted to link the extension and research and development aspectsof their project from the start. The research and development work has been continued in the Gobar Gas Company. The staff work as troubleshooters on any problems on the plants they build. They have been continuing basic research projects such as use of alternative feedstock in biogas plants, use of gas for running engines for agro-processing, generating electricity and pumping water.

USAID had provided a grant to the programme in 1979 and suggested for the proper use of planning procedure. With the better understanding of the process of planning, GGC began to involve local supervisors in developing targets for their areas. They have no previous experience on planning and were habituated to overplanning so the yearly national target was much higher than the company was capable for implement.

The extension agents needs a basic understanding of how biogas works and how a biogas plant is made, so that they can explain the technology clearly to customers and be effective in quality control and follow-up works. As a result, the Company trained hundreds of company masons as well as local masons. Most of them have been working with the existing 49 biogas construction companies. After implementation of the Biogas Support Programme, the Baral Gobar Gas Sewa Kendra, Pokhara in Kaski district, Kishan Gobar Gas Udyog in Nuwakot district, Nepal Gobar Gas Bistar tatha Bikash Company P. Ltd. Dumre, in Tanahun district, Rastriya Gobar Gas Nirman tatha Sewa P Ltd. Bharatpur, in Chitwan district, Nepal Gobar Gas P. Ltd. in Kathmandu district were established in private sector for gobar gas installation. The number reached to 21 in the second year, 37 in the third year, 41 in the fourth year and 49

at present (i.e. in the year 2000/2001). BSP has listed some districts as almost near saturation of biogas where no new companies are allowed to open their offices. These districts include; Jhapa, Morang, Makawanpur, Chitwan, Rupandehi,Tanahu, and Kaski. Similarly it has identified some districts as low penetration districts where it provides additional subsidy of Rs 1000 per each plants constructed in those districts. These districts include Okhaldunga, Khotang, Achham and some others.

During these days the Companies are also involved in quality control of the plants, as the quality of biogas plant is a major concern for commercializing the technology. Junior biogas technicians (JBT) are trained for this purpose. They have realized that a non-functioning biogas plant would damage the credibility of the technology.

The list of recognized biogas companies presently working in Nepal is shown in the table 4 below:

Table 4: List of recognized biogas construction companies

SN	Name of Company	Code	Location
1	Biogas Bistar Company	BBI	Bharatpur, Chitwan
2	Butwal Gobar Gas Company	BGC	Butwal, Rupandehi
3	Bageswori Gobar Gas Company	BGG	Pokhara, Kaski
4	Bhairabhi Gobar Gas Udgyog	BGY	Bidur, Nuwakot
5	Baikalpik Urja Bikash Company	BUB	Bharatpur, Chitwan
6	Dhor Barahi Gobar Gas Company	DBR	Putalibazar,Syanja
7	Dhaulagiri Gobar Gas Company	DGC	Baglung
8	Gobar Gas tatha Krishi Yantra Bikash P. Ltd.	GGC	Kathmandu
9	Gramin Gobar Gas tatha Urja Bikash Company P. Ltd.	GGG	Dumre, Tanahun
10	Gandaki Gobar Gas Sewa Kendra	GGK	Pokhara, Kaski
11	Gharelu Gobar Gas tatha Pravidhi Vikash Co. P. Ltd.	GPC	Butwal, Rupandehi
12	Gramin Urja Bikash Company P. Ltd.	GUB	Pokhara, Kaski
13	Gorakhakali Gobar Gas Company	GUD	Gorkha
14	Himalayan Gobar Gas Sewa P. Ltd.	HGG	Bharatpur, Chitwan
15	Integrated Energy Development Company	IED	Kumroj, Chitwan
16	Janasewa Gobar Gas Company	JAN	Bharatpur, Chitwan
17	Janata Gobar Gas Nirman Company	JGG	Bharatpur, Chitwan
18	Janabhawana Gobar Gas Udyog	JGY	Bidur, Nuwakot
19	Jana Priya Gobar Gas Company P. Ltd.	JPG	Imiliya, Kapilvastu
20	Kamana Gobar Gas Company	KAM	Bhoteodar, Lamjung
21	Khanal Gobar Gas Sewa Kendra	KGG	Damauli, Tanahu
22	Kishan Gobar Gas Udgyog	KGY	Bidur, Nuwakot
23	Kamala Gobar Gas Company P. Ltd.	KML	Damak, Jhapa
24	Krishi Vikash Gobar Gas Company	KRI	Biratnagar, Morang

25	Lok Priya Gobar Gas Company	LOK	Malekhu, Dhading
26	Manaslu Gobar Gas P. Ltd.	MGG	Damak, Jhapa
27	Manakamana Gobar Gas Sewa Kendra	MKG	Pokhara, Kaski
28	Nepal Biogas Company P. Ltd.	NBG	Kathmandu
29	Nepal Gobar Gas Bistar tatha Bikash Company P. Ltd.	NGG	Dumre, Tanahu
30	Nilkamal Gobar Gas Company	NRG	Bharatpur, Chitwan
31	Nepal Rastriya Gobar Gas Company	NRG	Putalibazar, Syanja
32	Paschimanchal Dhaulagiri Gobar Gas company	PDG	Manigram, Rupandehi
33	Public Gobar Gas tatha Rural Development Company	PGC	Butwal, Rupandehi
34	Pragati Gobar Gas Sewa Kendra	PGG	Pokhara, Kaski
35	Rapti Gobar Gas Company	RAP	Hetauda, Makawanpur
36	Rastriya Gobar Gas Nirman tatha Sewa P. Ltd.	RGG	Bharatpur, Chitwan
37	Sital Gobar Gas Company	SIT	Tamnagar, Kapilbastu
38	Sana Kishan Samudahik Gobar Gas Company	SKG	Birtamod, Jhapa
39	Tribeni Gobar Gas Company	TGG	Nawalparasi
40	All Nepal Biogas Company P. Ltd.	ALL	Banepa, Kavre
41	Batabaran tatha Urja Bikash Company P. Ltd.	BAT	Biratnagar, Morang
42	Centre for Alternative Energy Promotion P. Ltd.	CAP	Dhankuta
43	Chandikali Gobar Gas Company	CHA	Putalibazar, Syanja
44	Deurali Gobar Gas Company P. Ltd.	DEU	Banepa, Kavre
45	Gobar Gas Nirman tatha Pravidhic Sewa P. Ltd.	GNT	Okhaldhunga
46	Laligurash Gobar Gas Company P. Ltd.	LAL	Tamghas, Gulmi
47	Lamjung Gobar Gas Nirman tatha Gramin Batabaran Samrachana P. Ltd.	LGG	Benishahar, Lamjung
48	Mahesmati Gobar Gas Udyog P. Ltd.	MGU	Malekhu, Dhading
49	Mechi Gobar Gas Company P. Ltd.	MEC	Birtamod, Jhapa

Currently these companies have expanded their offices in 164 places and are providing services in about 66 of the 75 districts in the country.

5. Factors Affecting Biogas Plants

There are several factors affecting biogas plants of which the major factors are briefly discussed hereunder.

a. Temperature

The optimum temperature for methane producing bacteria is about 35 degree Celsius. When the slurry temperature is low, gas production is greatly reduced. At 10 degree (slurry temperature), the production of biogas more or less stops. In dome plants, the temperature can be increased with composting whereas in drum plant it can be increased by solar radiation and in both by using the heat exchanger if the gas is used

for running engines. At various digester temperatures, the gas production was found as follows:

Table 5: Gas production at various digester temperatures

Digester temperature	25 degree	30 degree	35 degree
Gas production (cum) / kg total solid	0.26	0.30	0.45

b. Retention time

It is temperature dependent. The higher the temperature, the faster the bacteria use the food from the slurry and sooner it needs replacing. Retention time can be calculated as follows:

$$R = \frac{V}{F}$$

where, R= Retention time, V = Volume of the digester, F = Feeding

In Nepal, drum plants are designed especially for Terai regions where temperature is higher and transportation of the drum is not a major problem. So, in these plants the retention time is 52 - 60 days. But in case of dome plants, the retention time was from 73 to 83 days for the plants built before 1990 as they were designed for the hilly regions where the temperature is comparatively lower. However, as no more drum plants are built in the country the retention time is calculated 55 days for the plants installed in the Terai and 70 days for the plants installed in the hills and higher mountainous areas.

c. Air

Methane producing bacteria are anaerobic. So air should be excluded in the plant interior.

d. Bacteria

The biogas plant is greatly affected with methanogenic bacteria. If these are less in number, gas production is greatly reduced.

The fermentation process involves in two stages. Firstly bacteria breakdown complex organic materials and secondly the breakdown of organic materials to produce methane by a kind of bacteria known as methanogenic microorganism. If this type of bacteria is not developed to attack cellular materials in the dung, methane cannot be formed.

e. Carbon nitrogen ratio (C: N ratio)

The elements of carbon and nitrogen are the main nutrients for anaerobic bacteria. Carbon is utilized for energy and nitrogen for the building of cell structures. Bacteria use carbon 25-30 times faster than they use nitrogen. So the ratio seems 25-30:1. If the carbon nitrogen ratio is not appropriate, we can increase or decrease the ratio by adding certain amount of urea or gypsum. But how much should be added can be determined as follows.

If one percent of dry weight of manure is nitrogen and 40 percent of the dry weight of manure is carbon and assuming 17% DM in manure, calculate the amount of urea required for 1 kg fresh manure to give C: N ratio 20.

Let u be the amount of urea required
Let Pcu be the fraction of carbon in urea = 0.200
Pcg be the fraction of carbon in gobar = 0.400
Pnu be the fraction of nitrogen in urea = 0.467
Png be the fraction of nitrogen in gobar = 0.10
Dry matter (DM%) of gobar = 0.17

We have from the formula,

$$\frac{C}{N} = \frac{Pcu*u + Pcg * DM * 1}{Pnu *u + Png *DM *1}$$

By calculating the above formula, 3.7 gm is the required amount of urea for 1 kg gobar to give the C: N ratio 20.

The C: N ratio of various feeding materials is given here under.

Table 6: C:N ratio of various feeding materials

Materials	Gobar	Straw	Pig manure	Poultry droppings	Night soil
C:N ratio	25	87	14	8	8

f. pH

pH for bacteria is usually 7-8, but can go up or down further by 0.5. pH can be checked either with universal indicator or pH paper or pH meter. It is quite easy to find out the pH with the help of pH paper. If it is with pH meter, the following calibration procedure should be followed.

At first the cap from the probe should be removed and should be placed into pH 7 buffer (after cleaning with distilled water). Then selector knob should be turned to 'pH' and calibration knob should be adjusted to give a reading of pH 7. Again the selector knob should be recorded.

Similarly sample pH measurement procedure should be done as follows. Firstly turning selection knob to '0' should check calibration. If reading is not the same as that recorded earlier, calibration knob need to be adjusted. Now the probe (with cap off) should put in

sample and the selector knob should turn to pH and the reading should be noted.

g. Gobar water ratio

The ratio is dependent upon the dry matter percentage (DM%) of the feeding materials. However, there should not be any stratification in the digester. In other words, mixing of gobar should be properly done, which can be easily observed by calculating the DM percent. If there is a great change in DM percent of the top as well as bottom, there will be stratification. Generally, gobar water ratio should be 1:1. If the amount of water is more the gas production is less.

The slurry should be neither too thick (more than 14% TS) nor too thin (less than 6%) but should be 8-10 % of total solids (TS). If pig or poultry droppings are used, the total solid contents should be 6%.

h. Volatile acids

Volatile compounds are acetic acid, propionic acid, butyric acid etc. Volatile acids are more important than pH as they give the actual situation inside a plant. These can not be easily measured and this has to be left to researchers.

i. Solid contents

Fresh cattle dung normally has solid contents of 15-24 percent. The solid contents of the slurry should be 8-10%.

j. Toxic substances

This does not apply to village situations. Some animals are given special foods and medicines. For practical

purpose these can be ignored, as they will not very much affect the gas production. However, the night soil plants used in the hospitals may contain toxic substances such as phenol, harpic, sulphate, soap, fats and antibiotics.

Viewed from microbiological perspective, gas production from grass feed gobar or straw feed gobar might be different due to the nutrient contents in the feeding materials.

6. Achievements and Challenges

6.1 Biogas installation

So far 49 companies have installed about 80 thousand biogas plants in Nepal. The Government has provided a subsidy of Rs 6,000 for the plants installed in the Terai and Kathmandu valley, Rs 9,000 in the Hills and Rs 11,000 in the remote Hills. Additional Rs 1,000 is provided for the plants of less than 6 cum capacity. Similarly, further additional subsidy of Rs 1000 is provided for the plants installed in the potential but less penetration districts. Photo 3 shows the under construction stages of both brick wall and stone wall fixed dome design biogas plants.



Photo 3 - Brick wall and stone wall dome design biogas plant under construction

The following graph fig. 2 shows the number of family size biogas plants built in Nepal

Fig. 2: Installation of biogas plants as at the end of June 2001

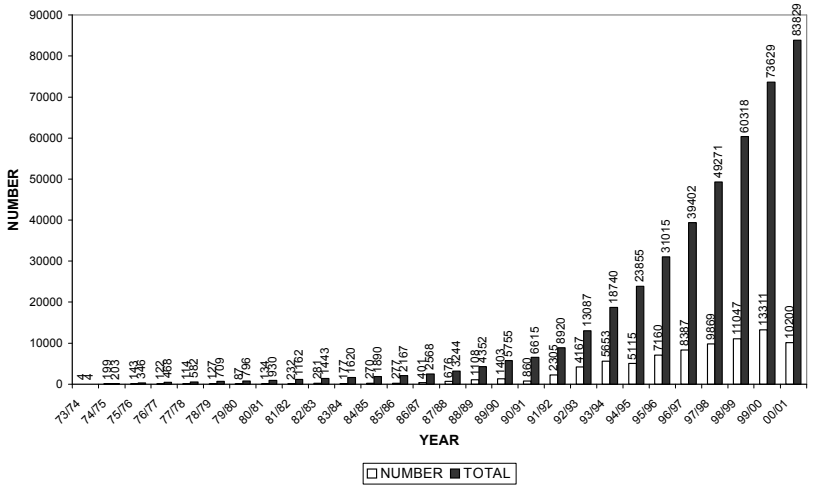

The most popular design is the dome design and the prescribed feeding of different sizes of the plants is given in table no.7.

Table 7: Feeding rate of fixed dome design biogas plants

SN	Capacity in cum.	Initial gobar required (Kg)	Daily feeding (kg)		Daily water required (Lit.)		Required cattle head
			Hills	Terai	Hills	Terai	
1	4	1450	24	30	24	30	2-3
2	6	2200	36	45	36	45	3-4
3	8	2900	48	60	48	60	4-6
4	10	3500	60	75	60	75	6-9
5	15	5550	90	110	90	110	9-14
6	20	7200	120	150	120	150	Above 14

a. Some possible problems and their solutions

Some possible problems of biogas plants and their solutions have been presented hereunder:

Table 8: Some possible problems of biogas plants and their solutions

Problems	Reasons	Solutions
Gas does not burn	The first gas coming from the plant may not burn	Remove the gas from the dome once or twice and will start burning.
There is plenty of gas inside the dome but won't come in the stove or lamp	Main valve may be closed	Open the main gas valve.
	Gas tap or gas jet may be blocked	Clean the gas tap and gas jet.
	May be blocked in the pipe line	Open main gas valve and water drain. Remove the water or slurry through the water outlet.
Less gas production	May be there is no daily and adequate feeding	Feed the digester as recommended.
	May be cold	Insulate the plant with composting.
	More water inside the digester	Put less water in the toilet and add water as recommended.
	May be due to toxic substance while cleaning toilet	Clean the toilet only with brush and water.
	Leakage from the pipe line	Check the joints and fittings with the help of soap water. If bubbles occur repair the leakage.
Flame is very weak and red	There may be impurities in the gas tap and stove	Clean the gas tap and stove weekly.
	Less gas inside the plant	Close the main gas valve and collect the gas.
Gas burns with long flame	There may be blockage in the air regulating hole and ring	Clean the hole and the ring.
Slurry comes through the pipe line	Inadequate feeding	Feed the plant adequately.
	Gas using frequently	Close the valve for about 10 hrs.
	Gas leakage	Check the main gas valve and other fittings with soap water and repair the leakage. If the problem is not solved contact the concerned company.

Over the past thirty years, the development of biogas technology has gained great momentum in comparison with other renewable energy technologies despite some problems occurring in technical or financial nature concerning policy

level and institutional field. Low gas yield especially in the winter seasons, underfeeding of the plants, no commercial use of gas as well as slurry, no choice of other design, size and feeding materials are some of the technical problems. Single quotation, lengthy loan process are some of the financial problems. Similarly, irregular and inconsistent policies in the past and in a few cases misuse of subsidy are some of the policy level and institutional problems.

Besides these problems, the owners are advised to visit the company from where they have installed their plant to understand more about the operation of the plants effectively.

b. Community Biogas:

In the past biogas plants were installed at community level as well. These were owned by the respective communities. Biogas has been traditionally used for cooking and lighting; domestic uses save money, but do not result in cash income. If the gas is used for running engines, the community can earn money. In principal, there are many ways in which biogas can be used to earn money. GGC has experienced with agro-processing, generating electricity and pumping water for irrigation.

Several community biogas plants use biogas to run a dual-fuel engine. The finding of one of the study was that the members of the family were happy with the profit that they could earn from the operation of the plant. About 60 community biogas plants were installed by GGC in Nepal besides the individual family size biogas plants.

However, due to some social problems, these community plants were not functional for a long period of time. Several dual-fuel engines were working in

Nepal on biogas. These engines were purchased from India (Kirloskar and Usha) and use a very simple gas carburetor and seem to be fairly robust and reliable. A 5- HP (3 kW) engine uses about 2.1 cum. of biogas and 0.2 lit. of diesel in an hour, as opposed to 1.2 lit. of fuel on the diesel alone. The gas from community biogas plants was used to run 5 to 8 HP engines mostly for agro-processing and in a few cases for generating electricity and pumping water. Table no. 9 shows the details on the community biogas plants installed in Nepal:

Table 9: List of community biogas plants

SN	Address / District	Installation year	Plant size/ Capacity	No. of H/Hs	Engine HP
1	Tikuligarh, Rupandehi	1980/81	500 cf.	4	7
2	Bhutaha, Nawalparasi	1981/82	500 cf.	4	7
3	Laxipur, Dang	1981/82	500 cf.	5	7
4	Chorkate, Gorkha	1981/82	20-20 cum	3	7
5	Mahendranagar, Dhanusha	1981/82	500 cf.	4	-
6	Malam, Gauritar	1981/82	20 cum	3	-
7	Bagauda, Madi, Chitwan	1981/82	500 cf.	4	-
8	Khairmara, Mahotari	1981/82	500 cf.	2	8
9	Birendranagar, Chitwan	1982/83	500 cf.	4	7
10	Amaruli, Madi, Chitwan	1982/83	500 cf.	2	7
11	Gularia, Bardiya	1982/83	500 cf.	4	8
12	Birendranagar, Chitwan	1982/83	500 cf.	3	-
13	Trijuga, Dulari, Morang	1982/83	500 cf.	4	7
14	Madhubasa, Dhanusa	1982/83	500 cf.	4	5
15	Rautahot, Lalbandi	1982/83	15-15 cum	7	-
16	Jaleshore, Mahotari	1982/83	500 cf.	2	-
17	Pakadia, Dhanusha	1982/83	500 cf.	2	-
18	Chandragadi, Jhapa	1982/83	20 cum	3	-
19	Changlee, Gorkha	1982/83	500 cf.	4	-
20	Motipur, Kapilbastu	1983/84	750 cf.	3	8
21	Bhojhar, Chitwan	1983/84	500 cf.	2	8
22	Ayodhapur, Madi, Chitwan	1983/84	500 cf.	2	8
23	Ghurmi, Udaipur	1983/84	500 cf.	6	10
24	Baghauda-3, Madi	1983/84	500 cf.	-	-
25	Chyanli, Gorkha	1983/84	20 cum	4	7
26	Basbari, Sindhupalchowk	1983/84	20 cum	4	7
27	Laxmipur, Rautahut	1983/84	15 cum	8	-
28	Janakpur, Dhanusa	1983/84	500 cf.	2	-

29	Bastipur, Siraha	1983/84	500 cf.	6	-
30	Mainapokhari, Bardiya	1983/84	500 cf.	4	-
31	Parsauni, Bara	1983/84	500 cf.	5	8
32	Baghauda-7, Madi, Chitwan	1983/84	500 cf.	5	-
33	Ugrachandi, Nala, Kavre	1983/84	20 cum	4	10
34	Laxminiya -8, Rautahat	1983/84	15 cum	6	-
35	Laxminiya -6, Rautahat	1983/84	15 cum	-	-
36	Laxminiya -8, Rautahat	1983/84	15 cum	-	-
37	Laxminiya -6, Rautahat	1983/84	15 cum	-	-
38	Pharghaba, Sarlahi	1983/84	750 cf.	-	-
39	Saljhandi, Rupandehi	1983/84	750 cf.	5	4
40	Semlar, Rupendehi	1983/84	750 cf.	5	7
41	Tamnagar, Rupendehi	1983/84	750 cf.	19	8
42	Basantapur, Chitwan	1983/84	500 cf.	13	8
43	Prempur, Madi, Chitwan	1983/84	500 cf.	-	5
44	Baguwa-8 , Chitwan	1983/84	500 cf.	-	-
45	Chandranagar, Sarlahi	1983/84	750 cf.	-	-
46	Letang, Morang	1983/84	500 cf.	-	-
47	Bastipur, Lahan	1983/84	500 cf.	4	8
48	Jahada, Nawalparasi	1983/84	500 cf.	-	-
49	Rahardi, Bara	1983/84	500 cf.	4	8
50	Lalbandi, Sarlahi	1983/84	750 cf.	5	-
51	Sanischere, Jhapa	1983/84	50 cum	3	-
52	Lakhanpur, Jhapa	1983/84	50 cum	3	-
53	Panchagaohhi, Jhapa	1983/84	500 cf.	4	-
54	Keshavtar, Tanahu	1983/84	20 cum-3	6	-
55	Baguwa, Chitwan	1983/84	500 cf.	3	-
56	Changlee, Gorkha	1983/84	20-20 cum	4	8
57	Gaighat, Udaipur	1983/84	50 cum	3	-
58	Patariya, Siraha	1984/85	500 cf.	-	-
59	Chaitheri, Rupandehi	1984/85	500 cf.	-	-
60	Barathawa, Sarlahi	1984/85	1000 cf.	80	8

c. Night soil biogas plants:

One benefit of the biogas plant is that latrines can be connected to it thus improving the sanitation of the village and also the gas from the plant. In 1977, GGC had installed a 350-cf. drum plant running with night soil from 78 prisoners at Tansen jail in Palpa district. The gas was used for cooking food to the prisoners. Similarly in 1986, a 50 cum dome plant was installed at the Regional Police Training Center, Bharatpur at Chitwan district. The gas was used for cooking food to

the police in the barracks. In the same way, a 20 cum dome plant was installed in Surkhet Military Barrack for cooking food to the army staff members. Several night soil biogas plants have been installed in various schools. In 1980, a farmer Khaga Raj Poudel of Bhalam VDC of Kaski district connected his latrine to the 10 cum biogas digester. Similarly in 1987, two night soil biogas plants of 10 cum capacity each were built at Butwal by GGC R&D Unit on experimental basis. One of the plants was completely fed with night soil from 37 staff members of the company. The gas was used for making tea for the staff whereas in the second one the existing toilet was modified into a biogas digester. Gradually, this technology was introduced in every individual domestic biogas plants. As a result, nowadays, more than 90 percent of the plants are being connected to their toilets. The drawing of a latrine connection to biogas plants is shown in annex 1.



Photo 4 - Toilet attached biogas plant

6.2 Appliances Manufacturing

The following tools and devices are considered as biogas appliances and most of these are manufactured in sixteen recognized workshops in different places. These workshop consist of lathe machines, welding machines, drilling machines, sheet rolling machine, angle rolling machine, sharing machines, abrasive cutter, hydraulic press, grinding machines and pipe bending machine. Several staff members working in the workshops manufactured the following appliances. Most of the appliances are manufactured in the workshop of the respective Biogas Companies, which are equipped with all the necessary machines, manpower and materials. The following is a list of key appliances:

a. Steel drum

GGC workshop had developed floating drum plants of different sizes varying from 100 cf. to 1000 cf. capacities. These drums were made from 2.5 -3 mm thickness MS sheet. The life of these drums was estimated to be about 7-10 years and was costly to replace. As a result these drums are not popular in Nepal.



Photo 5 : 500 cft Floating drum plant

b. Mixer Machine

Some of the workshops have developed two types of mixing machines; horizontal and vertical. The performance of both mixing machines are good. The reported lifetime of the non-galvanized device ranges between 2-10 years. The horizontal mixture machine is expensive and thus, GGC developed vertical mixing machine. It was decided in July 1990 to take the non-galvanized mixer out of production.

Experience with vertical mixing machine is good but gained only on a limited scale. However only vertical mixture machine is used in most of the plants.

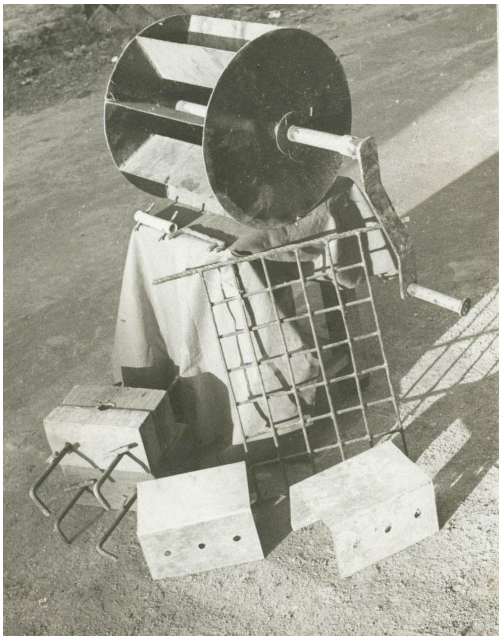

Photo 6: Part of Horizontal mixing machine

Fig. 3 : Diagram of vertical mixer machine

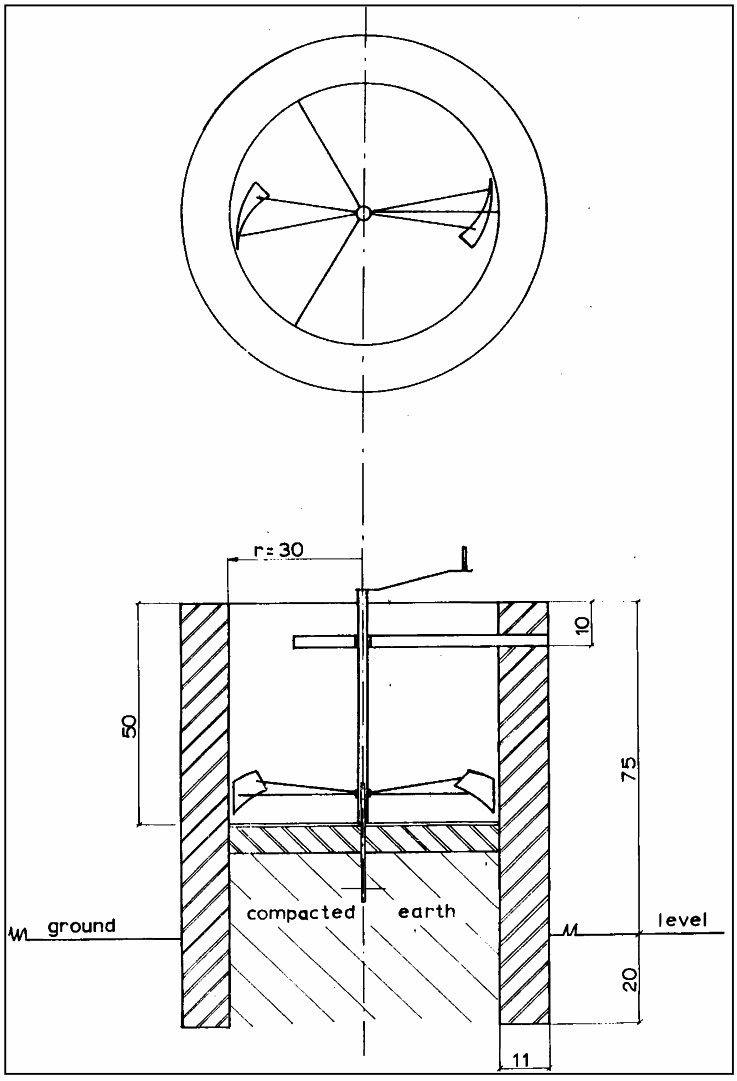

Source : GGC

c. Agitator

GGC had developed agitator for mixing slurry inside the digester of the dome plants. Although the performance of this agitator was good, gas leakage was noticed through these devices. It was because the dome was not casted properly. Later these agitators were removed from the dome.

d. Gas pipe

The quality of the gas pipe has been reported well. The inside diameter of the gas pipes was from 1/2 inch to 4 inches. Ultimately R&D of GGC approved the two inches GI gas pipe of light quality.

Fig. 4 : Diagram of stove

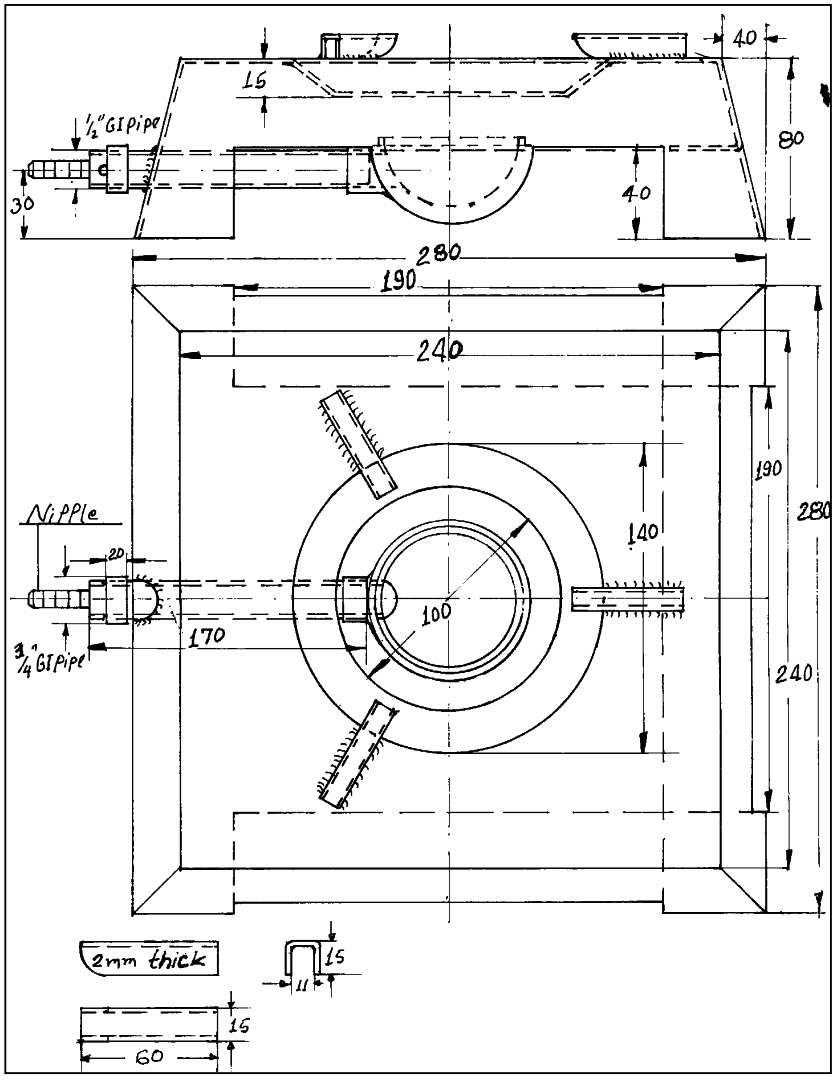

Thus it seems that the staff have been benefited from the training, observation tour and seminars / workshops conducted by various organizations at different places

7. Designs of Biogas Plants

7.1 Floating Steel Drum Design

The floating steel drum design biogas plant was first developed in India. The Khadi and Village Industries Commission (KVIC) had approved a design prepared by Jashabhai Patel for biogas extension programme. The floating steel drum design adopted by GGC was also based on the KVIC design with some modifications; which include taper digester design and gas outlet through the central guide pipe.



Photo 11 – 200 cft Floating drum design biogas plant

Drum or gasholder is welded steel fabrication with a steel frame at the open end. The gasholder is located at the center of the digester by a central inner guide pipe. Scum breaker bars or mixing arms are welded between top plate and the stiffeners. As biogas slurry is fairly corrosive, the gasholder and other accessories rust in 8-10 years. So the drum should

be sand blasted or cleaned with sand paper or wire brush and painted with high build black (HBB) paint each year. GGC made available of the drum plants of various sizes (i.e.100, 200 (fig. 11), 350, 500, 750 and 1000 cf.). The drum plants are named on the basis of gas production per day from the plant. The following table 11 shows the details of size, input and output of the floating drum plant.

Table 11: Size, volume and gas production of floating drum plant

Size (cf.)	Digester vol.(Cum)	Gas storage vol. (Cum)	Daily dung feeding (kg)	Retention time (Day)	Gas production/ day (Cum)
100	7.1	1.7	60	59	2.5
200	13.0	3.4	120	54	5.6
350	24.3	6.0	210	58	9.9
500	34.0	8.5	300	57	14.2
750	52.0	13.7	450	56	21.2
100	70.0	15.1	600	58	28.3

The digester of the drum plants was built underground. The inlet pipe was either of asbestos cement (AC) or PVC having 4-inch internal diameter. In bigger plants there is partition wall at the centre. The central guide pipe is placed at the center of two 'spiders' made of steel rod and fixed 300 mm apart into the brick wall. For mixing dung properly a mixing machine is fixed in the inlet pit. Similarly the water outlet device is placed at the lowest level to trap moisture present in biogas.

7.2 Fixed Dome Design

The fixed dome design biogas plant consists of an underground digester pit with a concrete dome shaped cover for collecting gas from the slurry. It is an adoption of a design developed originally in China. The modifications are: there is no manhole on top of the dome, the digester is connected with slurry reservoir chamber instead of AC pipe.

In fixed dome design, the concrete dome is casted over a mud mould. The gas pipe is placed at the center of the dome and fixed with anchors and supported with turret. The digester wall, inlet and outlet wall is made with first class quality bricks or stone. These plants were for the first time designed in the Research Unit of GGC at Butwal in the year 1979. Several air ceiling materials such as wax, coal tar and acrylic plastic emulsion paints were applied under the dome as ceiling materials while conducting research. Ultimately it was proved that acrylic plastic emulsion paint was the best ceiling material. Eleven such plants were installed in Pokhara during the same year and a follow up survey was made on 1981 by the author. This survey showed that all the plants were functioning well. Photo 12 shows various stages of the construction of fixed dome design biogas plant.


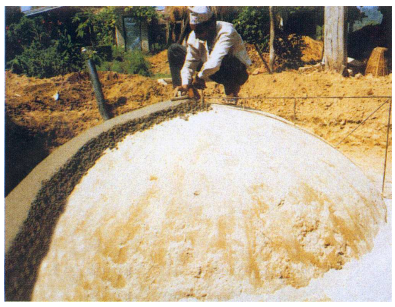
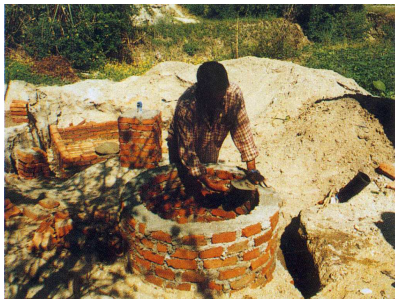



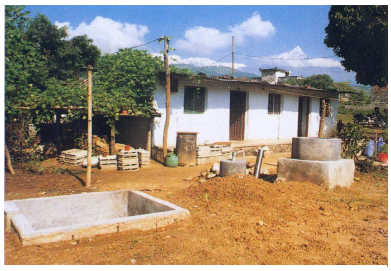

Photo 12 : Stages of dome design biogas plant construction

Initially plastering made the digesters of these plants simply on the mud wall (Fig. 11). However, nowadays the digesters of these plants are made with brick or stone wall plaster from inside. Similarly the curvature of the bottom floor is modified to flat bottom. Dome plants of 4, 6, 8, 10, 15, 20, 35, and 50 cum capacities were designed by GGC. Their volume named these plants. Table no. 12 shows the size, input and output of the fixed dome plant.

Table 12: Size, volume and gas production of fixed dome plant

Size (cum)	Digester vol.(Cum)	Gas storage vol. (Cum)	Daily dung feeding (kg)	Retention time (Day)	Gas production/ day (Cum)
4	2.8	1.2	25	80	1.4
6	4.4	1.7	40	75	1.8
8	5.8	2.2	48	83	2.2
10	7.5	2.8	60	83	3.1
15	11.4	3.9	90	83	4.2
20	14.2	5.8	120	83	6.4
35	27.4	8.9	210	83	10.5
50	39.1	14.9	300	83	15.0

The dome plant was found to be more appropriate for feeding any alternative feedstock such as crop residue,

kitchen waste, vegetable waste and industrial wastes feeding both in batch and continuous.

The design calculation of the existing 4, 6, 8, 10, 15 and 20 cum fixed dome design biogas plants are given in the following table 13 (a).

Table 13 a: Design calculation of the existing plants

Capacity	4cum	6cum	8cum	10cum	15cum	20cum
A	1.40	1.50	1.70	1.80	2.48	2.64
B	1.20	1.20	1.30	1.52	1.25	1.76
C	1.35	1.51	1.70	1.83	2.05	2.33
D	0.50	0.60	0.65	0.68	0.84	0.86
E	1.54	1.55	1.72	1.68	1.80	2.03
F	1.02	1.22	1.35	1.54	1.75	1.99
G	1.85	2.08	2.21	2.40	2.61	2.88
H	0.86	0.92	1.05	0.94	1.15	1.15
I	1.12	1.16	1.75	1.71	1.93	2.03
J	1.51	1.60	1.75	1.71	1.93	2.03
Template curvature (R)	1.13	1.44	1.67	1.93	2.36	3.30
No. of bricks	1200	1400	1700	2000	2400	2800
Cement bags	11	13	16	19	27	34
Sand bags	60	70	80	90	110	120
Aggregate bags	30	35	40	50	60	70
MS rod kg	11	11	14	14	18	44
Initial dung required						
Hills (kg)	1450	2200	2900	3500	5500	7200
Terai (kg)	1450	2200	2900	3500	5500	7200
Initial water required						
Hills (lit.)	1450	2200	2900	3500	5500	7200
Terai (lit.)	1450	2200	2900	3500	5500	7200
Daily dung feeding						
Hills (kg)	24	36	48	60	90	120
Terai (kg)	30	45	60	75	110	150
Daily water mixed						
Hills (kg)	24	36	48	60	90	120
Terai (kg)	30	45	60	75	110	150
Use of stove in hours						
Hills	2.5	3.5	5	6	10	12.5
Terai	3.0	4.0	5.5	7	12	14.5

Note : All dimensions of the plants (A-J) are given in meters. (Fig. 9)

Similarly, the author has also designed fixed dome biogas plants of 5, 7, 9, and 12 cum capacity. The dimensions as

well as technical details of these plants are provided in table 13(b).

Table 13(b): Design calculation for 5, 7, 9 and 12 cum dome plant

Capacity of plant	5 cum	7 cum	9 cum	12 cum
A	1.40	1.60	1.75	2.20
B	1.25	1.25	1.30	1.25
C	1.43	1.58	1.81	1.97
D	0.52	0.60	0.68	0.75
E	1.54	1.72	1.72	1.72
F	1.13	1.28	1.46	1.62
G	1.98	2.13	2.31	2.47
H	0.88	0.96	0.95	1.03
I	1.10	1.20	1.19	1.25
J	1.56	1.68	1.70	1.84
Template curvature (R)	1.30	1.55	1.82	2.15
No. of bricks	1278	1554	1812	2329
Cement bags	12	14	19	25
Sand bags	65	75	85	105
Aggregate bags	33	38	45	55
MS rod Kg	10.5	10.5	13.5	15
Initial dung required				
Hills (kg)	1850	2500	3250	4380
Terai (kg)	1850	2500	3250	4380
Initial water required				
Hills (lit.)	1850	2500	3250	4380
Terai (lit.)	1850	2500	3250	4380
Daily dung feeding				
Hills (kg)	30	42	54	72
Terai (kg)	38	53	68	90
Daily water mixed				
Hills (lit.)	30	42	54	72
Terai (lit.)	38	53	68	90
Use of stove in hours				
Hills	3	4	5.5	7
Terai	4	5.2	7	9
Volume of digester (cum)	3.35	4.94	6.36	8.49
Volume of dome (cum)	1.53	2.05	2.73	3.61
Total volume (cum)	5.06	6.99	9.09	12.10
Volume of outlet (cum)	0.91	1.19	1.55	2.06

Note: All dimensions of the plants (A-J) are given in meters (Fig. 9).

The author has also designed larger sizes fixed dome design of 75 and 100 cu.m capacity especially for running engines. The diagram of these plants are shown in the annex 5 and 6.

Fig. 9 : Diagram of the fixed dome plant

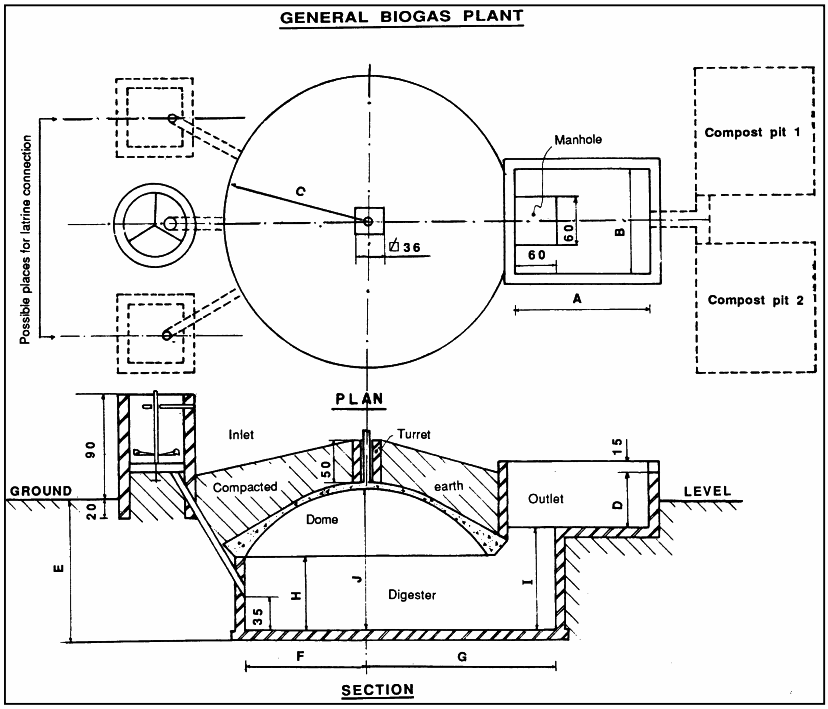

Fig 10 : Diagram of 1000 cft floating drum design biogas plant - Taper

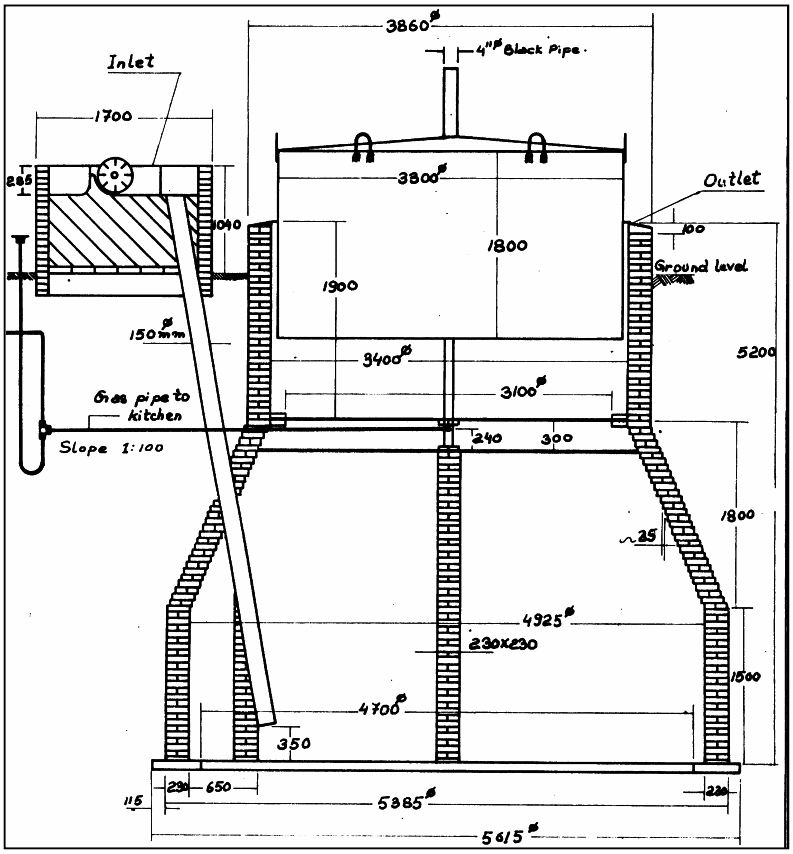

Source : GGC

Fig. 11 : Diagram of 10 cum fixed dome design biogas plant - mud wall plaster with curvature bottom

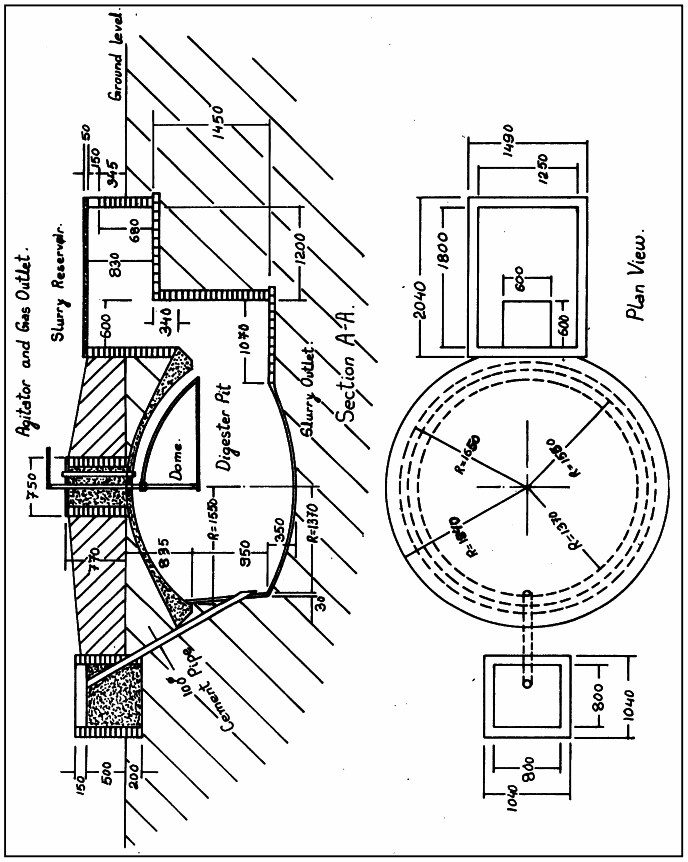

Source : GGC

7.3 Tunnel Design

Tunnel type or plug flow type digester incorporates some of the best features with slurry displacement gas storage system. The gas pressure is variable as in dome plants. Some plastic sheet and glue are used underneath the tunnel as ceiling material for collecting gas inside the tunnel (Fig. 12). Tunnel plants are of the size 10, and 15 cum in volume. About 100 of such plants were installed by GGC in Nepal.

Fig 12 : Diagram of tunnel design biogas plant

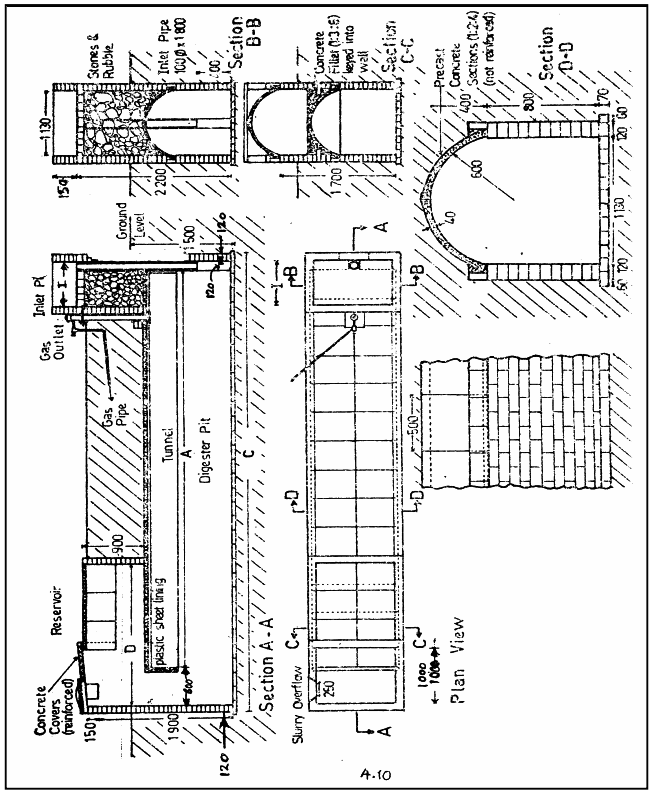

8. Basic Principles for installation of the fixed dome biogas plants

The fixed dome design biogas plant is the most popular design in Nepal and as a result more than 80,000 of such model plants have been installed here until the middle of 2001. In order to install such a plant the following construction materials are needed.

Bricks - burnt with No.1 quality.
Stones - clean and strong.
Sand - free from mud.
Cement - ordinary Portland
Gravel or pebbles - free from vegetable matter and soil.

Some important guiding factors are outlined below:

i. Site selection

- The plant should be close to where the gas is used - gas pipes are expensive.
- It should be close to the supply of input materials (dung, water etc)- it saves time and labour.
- It should be close to the place where effluent can be stored.
- It should be 10-15 m far from any shallow wells (drinking water sources).
- It should be free from any intrusion of bamboo or big tree roots.
- It should be in the sun.
- There should be suitable foundation conditions.

ii. Lay out

The positions of the digester pit, inlet, toilet attachment and reservoir are defined. The centre of the dome is

located and circle of diameter (depending upon the size) is marked on the ground using string, lime powder and sticks.

iii. Digging pit

A hole is dug within the circle to the required depth to make the digester.

iv. Brick/ stone soling

Soling must be done on unmoved, levelled and compacted earth. Stone or bricks to be laid uniformly and concrete should be poured in between.

v. Brick wall around the pit including inlet pipe fixing

While making brick wall, a piece of 1/2 inch GI pipe or MS rod should be placed vertically and with the given radius, 4" brick wall to be made up to the given height. The inlet pipe is to be placed accordingly.

vi. Plaster on the brick wall

Brick wall to be plastered about 10 mm with 1:3 cement sand ratio. Back filling must be done after making brick wall.

vii. Mud mould and casting concrete dome

Fill with mud inside the digester up to the height of the dome, which is marked at the central pipe, which is buried in the mud. Using template make the shape of the dome. Put some thin layer of sand on top of the dome. 1/2-inch central pipe to be replaced with main gas pipe. Cast the dome with 1:3:3 ratio of cement, sand and gravel. The thickness of the dome at the

centre must be 7 cm for the plant up to 10-cum. capacity. The anchor of the main gas pipe should be placed properly.

viii. Turret construction

Make turret of about 50-cm height on top of the dome next day.

ix. Inlet construction

Inlet pit must be constructed in a way that gobar-mixing machine should exactly fit inside the inlet pit. The floor level of the inlet pit must be 5 cm whereas the toilet pan 15 cm. above the over flow of the outlet reservoir tank. The height of the inlet tank should be 50 cm. above ground level. There should not be more than 2 cm gap in between the wall and the edge of the mixing arm of the machine.

x. Outlet construction

The length, breadth and the height of the outlet must be as given in the drawing. It should be above ground level and is made of 4" brick wall masonry and plaster with 1:3 cement sand mortar.

xi. Casting concrete slabs

The outlet reservoir should be covered with 3" reinforced concrete slabs.

xii. Pipe fittings

In order to avoid leakage pipefitting must be done using teflon tape. There should not be any unnecessary fittings and unions. There should not be any fittings in

between the main gas valve and main gas pipe. The pipe fittings should be about 1' below ground level. The main gas valve must be closed when the gas is not used. Water drain must be made at the lowest level of the fittings. The size of water drain pit must be 40X40 cm and depth 50 cm. and the cover of 66 X66 cm. concrete slab.

xiii. Plastering and painting dome

After removing all mud from the digester, the dome must be cleaned with wire brush and water. Put cement water solution on the dome. Plaster the dome with 1:3 cement sand mortar of 10-mm thickness. Next day plaster with 1:2 cement sand mortar of 5 mm thickness. Apply acrylic plastic emulsion paint mixed with double of cement. Top filling of the dome with mud should be about 50 cm. high.

xiv. Leak testing

Once the plant is completed fill the plant with water and do the leak testing if it is applicable.

xv. Feeding the plant

When there is no leakage, feed the plant with the mixture of gobar and water at the ratio of 1:1. Make at least two compost pit equal to or bigger than the volume of the plant. Properly store, and use the slurry in the field to various crops as and when needed.

xvi. Operation of the plant

Remove the first gas collected inside the dome, it may not burn. Now, the plant is ready for cooking or lighting.

9. Economics of Biogas Plants

The existing biogas companies lack adequate knowledge or experience in commercialization of biogas in Nepal. There are several factors that need to be considered for commercialization of biogas technology. A study report on technical biogas potential per district in Nepal stated that until at present only technical potential of biogas in Nepal is estimated at 1.3 million units on the basis of national data on the number of households and dung production. However, the economic and social potential, is estimated about 50 percent of the technical potential.

Funding for biogas installation comprises loan as well as subsidy. ADB/N, Rastriya Banija Bank (RBB) and Nepal Bank Limited (NBL) provide loan for the installation of biogas plants. The application process for a biogas loan from the bank concentrates on the collateral of the farmers. Nowadays the trend of installing biogas plant on payment of cash has become more popular. A standard contract between companies and farmers is made for biogas plants installed on cash payment basis.

9.1 Cost of the plant

The cost for installation of plants varies from one place to another and also from one size to another. However, the quotation issued by NBPG, which applies to most of the companies for the fiscal year 2001/02 has been provided in table no.14.

Table 14: Cost of various sizes of fixed dome plants

Particulars	**4 cum**	**6 cum**	**8 cum**	**10 cum**
Biogas appliances and their fittings	4842	5399	6251	6601
Construction charge	4100	4800	5200	5800
3 Years guarantee	600	600	600	600
Promotion fee	525	525	525	525
Sub-total	10167	11424	12676	13626
Materials cost at hills	10194	11944	14705	17135
Material cost at Terai	9874	11624	14065	16495
Total cost at hills	**20,361**	**23,368**	**27,381**	**30,761**
Total cost at Terai	**20,041**	**23,048**	**26,741**	**30,121**

Note : Figures are given in NRs. (US $ 1 = NRs. 75)

The cost of an 8 cum biogas plant at present is estimated at Rs 27,381 in Hills and Rs 26,741 in the Terai as given in table 15.

Table 15: Costs of a particular 8 cum biogas plant

Particulars	Amount (Rs)
Biogas appliances	5081
GI pipe and its fittings	1170
Construction charge	5200
Guarantee charge	600
Promotion fee	525
Sub-total	12,576

Table 16: Construction materials and labour costs for 8 cum plant

Particulars	Quantity	Amount (Rs)
Brick or stone	1700 PC	5100
Sand	80 bags	1200
Gravel	40 bags	480
Labour	30 man days	1800
MS rod-8mm	13.5 kg	378
Cement	21 bags	5670
Sub-total		14,628

The total cost arrives at Rs 27,204

It has been assumed that the life of a biogas plant is 25 years, the present purchasing price of firewood and kerosene is Rs 1.5 per kg and Rs 17 per lit. respectively. Plant nutrient present in the dung is assumed to be N = 0.5%, P= 0.25% and K= 0.5%.

Similarly the maintenance cost of the plant has been estimated at about Rs 400/year and the plant produces 2.2 cum. of gas per day. The Government provides a subsidy of Rs 9,000 for 8 cum plant installed in the Hills.

9.2 Saving and Expenditure

Annual saving

Saving of firewood (6 kg/day at the rate of Rs 1.5/kg)	=	3240
Saving of kerosene (2.5 lit. /month at the rate of Rs 17/lit.	=	510
Saving of chemical fertiliser (estimated 17500 kg gobar)	=	2000
Total saving	=	5750

Price of NPK saved is based on price of urea, DAP and MoP and 45 percent subsidy in urea, i.e. 20.31/kg of nitrogen, Rs 15.94/kg phosphorus and Rs 10/kg of potassium.

Annual expenditure

Total investment cost is Rs 27,204

Running cost	
Labour cost - 15 minutes a day @ Rs 70/day	= 800
Operation and maintenance cost is estimated	= 400
Miscellaneous cost	= 100
Total expenditure	= 1300

9.3 Payback period

Payback period is calculated as follows:

$$\text{Payback period with subsidy} = \frac{\text{Total investment cost - subsidy}}{\text{Annual saving - annual expenditure}}$$

$$= \frac{27204 - 9000}{5750 - 1300}$$

$$= \frac{18204}{4450}$$

$$= 4.1 \text{ years}$$

$$\text{Payback period without subsidy} = \frac{\text{Total investment cost}}{\text{Annual saving - annual expenditure}}$$

$$= \frac{27204}{5750 - 1300}$$

$$= \frac{27204}{4450}$$

$$= 6.1 \text{ years}$$

Thus, when there is no subsidy, it will take 6.1 years to repay the loan whereas with subsidy it will take only 4.1 years.

It has been felt that other organisations can also play an important role in increasing demand for installation of more biogas plants. The local NGOs through their networking, could develop awareness conducting workshops/seminars/meetings and through extension and promotion of the technology.

10. Quality Management of the Plants

The quality of biogas plant is a major concern for its commercialization. Non-functioning biogas plants damage the reputation of technology. It is necessary to safeguard the quality of biogas plants installed by various recognized biogas construction companies in Nepal. This is applicable not only to newly constructed biogas plants but also to after sales services and maintenance. In Nepal, each company was being providing a guarantee for three years on the structural parts of the plants such as dome, digester, inlet, outlet and water drain pit and one year guarantee on biogas appliances and fitting works.

Technicians of all companies visit each of the installed biogas plants once a year starting six months after completion of the installation. About 73 parameters have been developed by BSP for ensuring the quality of the plant

construction and its proper functioning. These parameters are categorised as: penalty equal to subsidy, penalty from Rs 10 to 700, no penalty and providing bonus to companies.

After providing maintenance report of all biogas plants each company technicians randomly select the plants constructed by the respective companies for quality control or management. The sampling is made on the basis of existence of the companies in the area, geographical locations, plant size, installer, controller of the plants and plants installed on cash payment or on loan basis. Information is collected on the basis of observation in the presence of company staff, interview with the owners and taking measurements of the plant. The capable institutes such as BSP, AEPC, and NBPG conduct such activities. At present, junior biogas technicians from the respective companies have also been conducting the activities.

Before quality control visit, the biogas technicians must have the following items and information with them.

- Latest print out of the plant construction progress report of the company / office concerned;
- Print out of progress/person/day after sales service;
- Print out of details of control plants of the offices concerned;
- Sufficient copies of the non-filled and filled plant inspection questionnaire on after sales service and problem plants;
- Latest plant control progress report;
- Address and code list of biogas companies;
- Ball point pen and note book;
- Technical papers such as quality standards plant measurement tables, general drawing, construction manual, instruction booklet and sample of guarantee card;

- Measuring tools: measuring tape, folding rod, pressure gauge and calliper;
- Camera, matches, shampoo solution, pH paper, Teflon tape, nylon washer and grease;
- Motor bike repair and maintenance set and
- Personal protection gear.

The number of plants inspected by the technicians depends on the progress of the company, plants already inspected by BSP, status of office and the past record on quality of the plants.

The main roles of technicians while controlling the plants include selection of control plants, inspections of the plants, observation of other field activities and office works. S/he should be familiar with and should follow code of conduct and motor cycle driving rules.

11. Slurry Extension Programme (SEP)

The pilot phase of BSP Slurry Extension Pilot Programme (SEPP) was implemented in 1996 and was followed by SEP Phase I in 1997. Based upon the experience gained during the period, Phase II of the programme is being implemented from the beginning of July 1998. The overall objective of the phase II of the programme is to increase the effective market of biogas plants through proper application of slurry in crop production. These include: awareness creation at farmers' level about compost pit, composting procedures, protection of compost pit, storage of compost and importance of slurry use in crop production; direction to users/owners in adopting proper slurry uses and incorporation of slurry extension in regular services of biogas companies and the concerned NGOs.

Institutional frameworks

The main objective of SEP II is that the slurry extension should reach biogas plant owners all over the country through the existing network of biogas companies and the Department of Agriculture of HMG/N and the NGOs involved in this programme.

With the biogas users as the main beneficiaries, biogas companies and the Department of Agriculture through its JT/JTAs as the main implementing agencies, the main institutional stakeholders in this programme who can make positive impact on use of slurry are:

- Alternative Energy Promotion Centre (AEPC);
- Department of Agriculture (DOA);
- Biogas Support Programme (BSP);
- Nepal Biogas Promotion Group (NBPG); and
- NGO Coalition for Biogas and Alternative Energy (NCBAE).

The Slurry Extension Programme has developed various training and promotional materials and NBPG has been providing training to staff members of the various companies whereas BSP and AEPC have been providing financial support. There is a provision of Slurry Co-ordination Committee (SCC) in order to implement, co-ordinate and report on progress of SEP II to AEPC and BSP. The Programme Co-ordinator is based at AEPC in Lalitpur and six regional slurry extension officers are based in Biratnagar, Janakpur, Lalitpur, Pokhara, Bharatpur and Nepalgunj. They have developed slurry reference booklet to biogas owners, and posters on different steps of slurry composting.

The main role of biogas companies are to assist, coach and encourage farmers in: making compost pits, make aware of composting procedure, protection of compost pit, storage of compost, and transport and application. Similarly, supporting

activities of the companies include to assist and coach biogas owners/users in: cattle shade improvement, encourage to add urine to the plant, feeding all available dung inside the digester, and fodder crop cultivation

Potential actors could be the extension workers of NGOs. The slurry extension programme to be implemented by NGOs should be supported by training and extension materials on proper use of slurry in addition to incentive for output achievement. Similarly biogas extension through users' groups, biogas women users' groups, literacy groups and community based organisations (CBOs) should be explored to run the programme in full swing.

12. Biogas Research and Development

The following R & D activities were carried out for a sustainable development of biogas technology in Nepal.

12.1 Designs of Biogas

a. Floating steel drum design

The whole set of biogas plant mainly consists of a digester pit, gasholder drum with central guide pipe, inlet with gobar mixing machine, outlet, and water outlet device.

Drum or the gasholder is of welded steel construction with a steel frame at the opened end. The top of the dome is slightly coned. Scum breakers or mixing arms are welded between top plates and stiffeners. The smallest size is of 100 cf. capacity and largest of 1000-cf. capacity. The smaller size plants below 350 cf. have been used for domestic purposes whereas the larger size biogas plants were used especially on community basis for running engines for agro-

processing, pumping water for irrigation and generating electricity.

The straight design is mainly used in an area where water table is low. As water table is quite high in the Terai, the taper design is commonly used. The details of the design of the plant and its accessories are shown in fig. 13 and 14 below.

b. Floating HDPE drum design

In order to get rid of the corrosive problem of the steel drum, floating HDPE drum design biogas plants were also developed in the research unit of GGC at Butwal. As there were no welding facilities in the rural areas of the country this design did not become popular. Such plant cannot develop pressure as HDPE is light in weight.

c. Ferrocement gas holder

Ferrocement gasholder was also developed and tested in the R & D Unit of GGC at Butwal. Such gasholders were very heavy for transportation and difficult to make leakproof, thus the design did not gain popularity.

d. Fixed dome design

Due to several difficulties with floating steel drum design, GGC developed fixed dome design, which consists of an underground digester pit with a concrete dome shaped cover over it for collecting gas from the slurry. In this design the use of steel and moving parts are eliminated due to which skilled mason with a little bit of training can undertake their construction. In the ratio of 1:3:3 cement, sand and pebbles from 20-25 mm mixed with

appropriate amount of water is poured over the mud mould covered with thin layer of sand for casting dome.

The following drawings (fig. 15) show the various development of this design in the country. After the several years' research activities, this design became most successful and popular in the country. As a result, BSP has adopted this design only for their programme.

e. Tunnel design

The digester of this design is also underground as that of fixed dome design but like a tunnel and hence its name is given like this. The slurry is fed at one end and discharged at the opposite end. Gas is stored in the roof of the plant, which is lined with plastic sheet and displaced slurry flows into a slurry reservoir at the overflow end of the plant.

The tunnel design (fig. 12) has certain advantages over the dome design. It is simpler to build and special skills for cement plastering are not required. It requires a shallow digester pit, so is useful where water table is high. It is of modular type of construction, using pre-cast concrete sections, so can be made of any size by adding extra sections. However, it is difficult to transport the pre-casted slab and is impractical to fabricate the pre-caste slab at the site.

f. Plastic bag biodigester

The PVC plastic bag digester received by GGC from the courtesy of UNICEF was tested in research unit at Butwal from April to June 1986 by the author. A tunnel type cavity was dug on the ground according to the intended size of the digester. Since PVC plastic is of 1 mm thick and

is a flexible grade plastic, it was fixed with the help of 3/4" G.I. pipes and several hooks fixed in the wooden planks. It is easy to install and transport the whole system. Such models are currently used in Tiwan and other countries.

g. Mud dome

In order to reduce the cost of the plant, a mud brick dome was first made in R & D Unit of GGC by late Mr. Ramesh Manandhar, a doctoral student of the University of Melbourne with the help of the author who was the then Biogas ResearchScientist of the company. Unfortunately the mud brick digester developed crack on the dome. The mud bricks were made out of 2:1:1:1 mud, gobar, rice straw and sand ratio. The details of this design are given in fig. 16.

h. Brick mortar dome

Brick mortar dome plant was made by the author at the Research Unit of GGC at Butwal in 1986 to reduce the cost of the plant and to make the technology affordable for rural Nepali users. Except the dome, the rest of the plant was constructed as the concrete dome. In brick mortar dome, two courses of burnt bricks in cement mortar were laid around the circumference of the dome. About 335 bricks were laid on top of the mud mould covered by thin sand layer. A mortar of sand and cement of 6:1 was poured on and around the bricks. Once it was completed, thin plastering (5mm) was made both from inside as well as outside the dome. About 10 -15 % of the cost was reduced. The plant is still functioning well.

Fig. 13 : 500 cft Floating drum design biogas plant

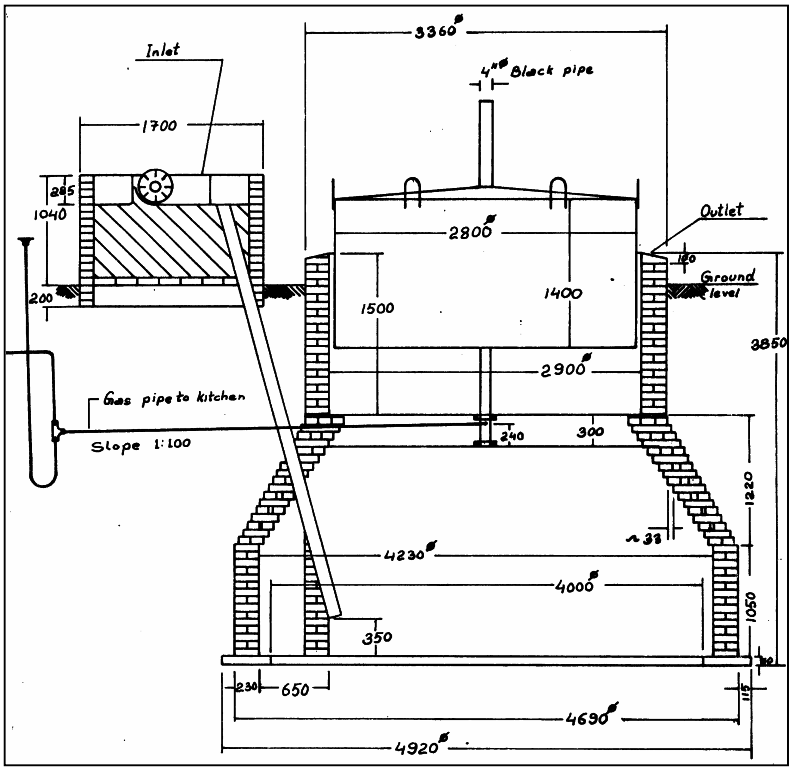

Source : GGC

Fig. 14 :750 cft Floating drum design biogas plant

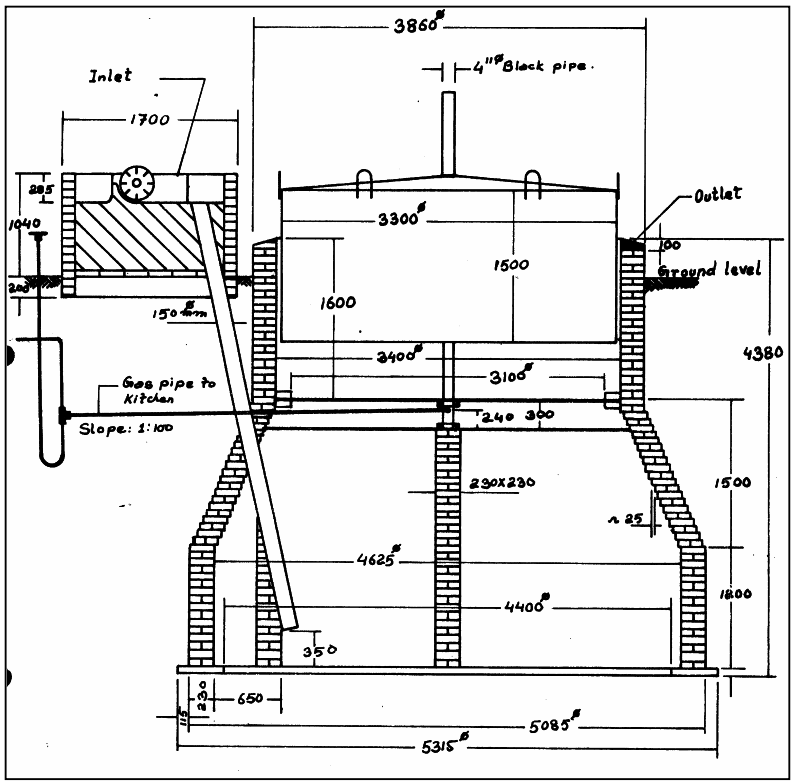

Source : GGC

Fig. 15 : Diagram of 15 cum fixed dome design biogas plant

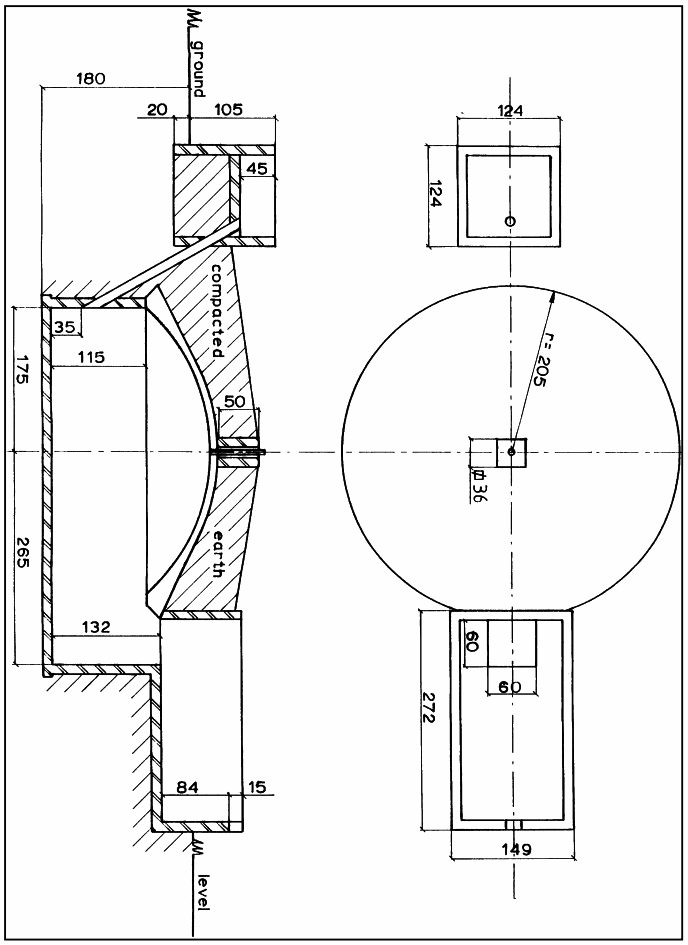

Source : GGC

Fig. 16 : Diagram of 10 cum mud dome design biogas plant

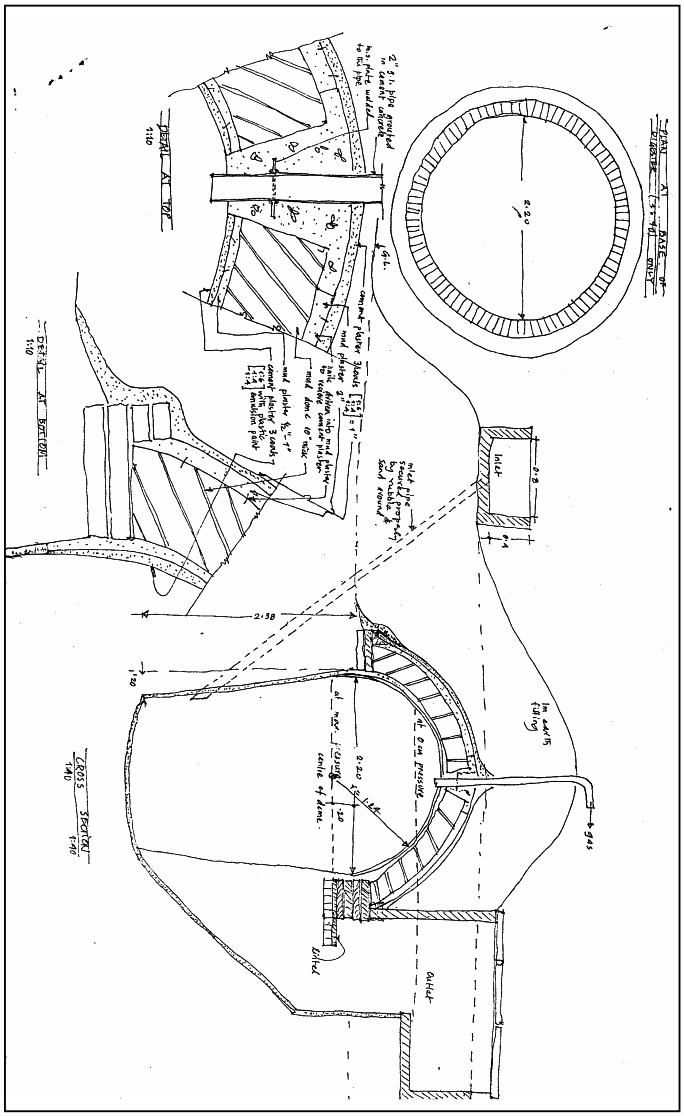

Source : GGC

12.2 Appliances development

Thirteen biogas appliance manufacturers have developed various biogas appliances in their workshop in different places of the country. The appliances include: gas pipe, stove both square as well as taper, main gas valve of various design, biogas lamp, water drain or water outlet device both for dome as well as drum plants. Similarly, GGC on top of this has also developed gas meter, manometer, pressure gauge, conversion kit, and iron running with biogas.

12.3 Alternative feed

Various alternative feedstocks were fed inside the digester and were limited in research and reports. However, the following alternative feedstock were tested and experimented.

a. Rice straw

Unchopped 440 kg of rice straw was fed to a 10-cum. brick mortar dome plant with 265 kg of effluent mixed with 440 kg of gobar mixed with equal amount of water. This experiment was performed in Research Unit of Gobar Gas Company at Butwal. Dry matter percentage of rice straw was found to be about 87 percent. At first the percentage of methane was only 20 when measured with an electronic gas analyzer. It was due to low nitrogen in the rice straw and the gas was not burnt due to high percentage of carbondioxide present in the gas. The pH at that time was 5 and the smell of the gas was like that of rotten egg. To make C: N ratio 25:1, 8.36 kg of urea was added and the percentage of methane increased gradually up to about 35. Then 1.5 kg each of lime and molasses was added inside the

reactor. The methane percentage was gradually increased to 40 and the gas started burning. The methane percentage was further increased to 58.4.

b. Water hyacinth

Water hyacinth of which the dry matter percentage of 9.3 was also used as alternative feed stock for producing biogas. This experiment was conducted both at laboratory as well as field-testing in an 8 cum tunnel plant. The gas production was almost double to that of gobar feeding plant. However, the problem of floating water hyacinth in the digester was noticed.

c. Banmara (Eupatorium species)

Unchopped Eupatorium species was fed to the first 10 cum biogas digester installed in Nepal with about 35 percent effluent from a working biogas plant where the other 10 cum. brick mortar biogas digester was fed with equal quantities of 15 cm. long chopped Eupatorium species and cattle dung. About 15 percent of the effluent from the previously working plant was added as seeds of methanogenic bacteria. This experiment was conducted from September to December 1983, under a project financed by the Swiss Association for Technical Assistance (SATA). The gas production was found 0.09 cum. per kg dry matter whereas in rice straw mixed gobar it was 0.198 cum per kg dry matter as shown in table 17.

One of the experiments conducted by the author in Butwal shows the following gas production from different feedstocks.

Table 17: Gas production from different feed stock

Item	Banmara mixed with gobar	Banmara alone	Water hyacinth and cornstalk	Rice straw and gobar	Gobar alone
Total DM (kg)	444	410	214	480	910
Total GP (cum)	64.2	36.8	70.6	95.0	133.6
GP/kg DM(cum)	0.145	0.089	0.330	0.198	0.147

Similarly the percentage of methane in the above experiment were found as given in table 18.

Table 18: Methane percentage from various feed stocks

Items	% of Methane	% of Co2 and other gases	Type of experiment
Banmara alone	44.6	55.4	Batch
Banmara mixed with gobar	49.3	50.7	Batch
Cornstalk with water hyacinth	-	-	Batch
Rice straw with gobar	58.4	41.6	Batch
Gobar alone	56	44	Batch

d. Industrial waste

Building biogas digester on a large scale would become a practical approach to improving the environmental pollution in the respective area. In Nepal, the wastes from the industries such as Bhrikuti Paper Factory in Nawalparasi district, Gorakh Kali Rubber Industry in Gorkha district, and the sugar mills, and distilleries at various places were used for producing biogas. These industrial wastes were tested and experimented in the laboratory at the R&D Unit of GGC at Butwal. As a result, a 10 cum plant was installed

at Lalbandi running with the waste from a local distillery.

Similarly, urban sewerage can also be used for producing biogas. A 20 cum plant was installed in Nepalgunj municipality in the western Terai using the wastes from the municipality.

12.4 Application of slurry

The slurry obtained from the dome plant installed in research unit of GGC at Butwal was tested and applied to various crops both cereals and vegetables in the field of GGC at Butwal under R&D activities. The physical and chemical properties of the slurry were found as follows:

Dry matter	7-14%
pH	6-8
C: N ratio	16:1
Nitrogen	1.76%
Phosphorus pentoxide	2.07%
Potassium oxide	2.30%

Besides these, other nutrients such as calcium, magnesium, sulfur, zinc, manganese, copper, boron in traces were also found.

The slurry was applied to rice, wheat, maize and tomato, potato, cauliflower, chili and so on for several years in GGC office land at Butwal by the author. The field was irrigated as needed until harvesting of all cereal crops. The field was divided into 16 plots (200 square meter each) where manure such as gobar, chemical fertilizer, bioslurry was applied. Gobar and bio slurry was applied with equal nitrogen contents. The results given in the table 19 and 20 below

indicate that the application provided better in vegetables as comparison to cereals.

Table 19: Manure applied and respective yieldings from cereals

Crop	Manure applied and respective yielding in Kg			
	Gobar	Chemical fertilizer	Bio slurry	Control
Maize	43.00	47.00	46.50	34.50
Wheat	11.50	17.30	12.90	8.80
Paddy	44.50	47.50	43.50	37.50

Similarly, the rate of yields (per kg in a square meter area) of vegetable crops were as follows:

Table 20: Manure applied and respective yieldings from vegetables

Crops	Chemical	Bioslurry	Chemical and bioslurry	Control
Potato	1.50	1.40	1.54	1.20
Onion	0.44	0.42	0.50	0.40
Cabbage	0.95	0.80	0.98	0.74
Lady's finger	0.35	0.34	0.36	0.30

12.5 Gobar battery

Gobar battery may produce 3-12 volts of electricity. The effluent obtained from the plant was used in making gobar battery, which can be used, for lighting fluorescent light, for running radios as well as clocks. About 30 such batteries were installed by GGC at Dukuchhap of Lalitpur district in September 1991. Similarly, the clock hanging in the GGC Head office of the company was running without any problems for 4-5 months even without changing gobar.

12.6 Methods of increasing gas production

There are various methods of increasing gas production, especially in winter months. Some of these are described below.

a. Compost for Heat Generation

One of the most important factors affecting biogas is the temperature. The optimum temperature for methane producing bacteria is about 35 degree Celsius. When the slurry temperature is low, the gas production is greatly reduced. At 10 degree, the production of biogas more or less stops. Insulation of dome with compost is one of the best methods for heat generation for smaller dome type biogas plants.

A compost pile can generate significant amount of heat from decomposition of organic materials such as agricultural residue, straw, grasses etc. Decomposition can be accelerated by the addition of water with effluent from the plant. The effect of compost for heat generation greatly varies with the height of the compost pile and the time it takes to decompose. The height should be not less than a meter or so. The compost should pile on the top of the plant for insulation.

This experiment was done in GGC at Butwal in October 1982, in a 10 cum dome plant. The plant was daily fed with 60 kg of dung. Daily gas production, temperature of the slurry as well as compost was measured.

A similar 10 cum plant at Kalikanagar, near Butwal was used as control measuring daily gas production as well as temperature. It was also

fed with equal amount of gobar daily with that of the first plant. The slurry temperature inside the digester was 2.03 degree Celsius more in the plant with compost. The gas production was increased by about 22.3 percent. Similar experiment was conducted in Kathmandu, and the gas production was increased by about 51 percent. This shows that the effect of composting is more in cooler place (Kathmandu) than in warmer place (Butwal).

Table 21: Increased in gas production after composting

Date	Daily input (kg)	DM% Gobar	Plant with compost		Control	
			Slurry temp.	Gas Prod. cum./day	Slurry temp.	Gas Prod. Cum/day
Oct. 15-31	60	17.38	27.26	2.03	27.00	-
Nov. 1-15	60	17.83	27.50	1.95	25.90	1.49
Nov.16-30	60	21.28	26.04	1.80	24.77	1.20
Dec. 1-15	60	20.35	25.00	1.66	23.00	1.48
Dec.16-31	60	23.28	25.10	1.90	22.68	1.71
Jan. 1-15	60	-	25.00	1.83	21.40	1.14
Jan. 16-31	60	-	25.13	1.77	22.00	1.44

Thus the compost is more than a fertilizer and soil conditioner. The compost generates heat for the plants, but also builds good soil texture and structure, provides and releases plant nutrients, protects against drought and stops nutrient loss through leaching but also stimulates the growth of the plants.

b. Utilization of Waste heat from biogas power generation

A heat exchanger was applied in a 500 cf. steel drum plant at Bhutaha of Nawalparasi district, the gas of which was used in 7 HP engine for agro-processing on experimental basis. The gas production was increased by about 37 percent in winter, assuming that only 50 percent gas could

be produced in a similar plant of the same capacity without having heat exchanger. Similar experiments were conducted in R&D unit of GGC at Butwal as well.

The engine installed was of water cooling system. One heat exchanger assembly is made up of concentric GI pipes connecting between the engine and heat exhaust silencer and uses waste heat from the exhaust gas to heat water. The other part of the heat exchanger was placed one foot above the digester base and heats the slurry in the digester. A valve can adjust the amount of cooling water flowing through the engine. Maximum heat was generated when the water was flowing at the rate of 2 lit. /min. as the flow rate increased the temperature decreased and vice versa.

The following table no. 22 shows the effects of heat exchanger in a 500-cf. drum plant in Bhutaha of Nawalparasi district.

Table 22: Increased in gas production after using heat exchanger

Water flow rate lit/min	Bottom slurry temperature 0 C	Ambient temperature 0 C	Gas production Cum cf.	
3.5	29	20	-	-
3.5	29	19	10.96	385
3.5	30	20	14.04	495
3.5	29.5	19	12.16	429.2

It is clear from the table that 12.37 cum gas is produced from 266 kg wet gobar (i.e. 50 lit. gas per kg wet dung). Thus using gas heat from an engine is one of the best ways to maximize

biogas production in winter in large size plants, by increasing the temperature of the slurry.

c. Solar radiation

In this process the influent (gobar mixed with water) in the inlet can be warmed under the sun by covering with a plastic sheet and let the influent enter inside the digester at about 2-3 p.m. This experiment was conducted at research unit of GGC at Butwal by the author. GGC experiments showed that this process could increase about 5 - 8 percent of the gas production.

d. Insulation with rice straw.

Insulation can also be done with rice straw, rice husk and so on. Their thermal conductivity is 23 times lower than that of soil and condenses to run off leaving the insulation dry.

Similarly plastic sheets like polyethylene can be used as a cover over insulating materials to reduce the amount of materials required. As light penetrates the plastic, it is transformed into the longer heat waves. The heat enhances evaporation of moisture from the insulating material and ground below. This experiment was conducted in a 10 cum plant of Mr. Kunda Dixit's premises at Patan Dhoka in Lalitpur district in Kathmandu Valley.

The gas can further be increased when gobar was mixed with other feeding materials such as poultry dropping, piggery and night soil.

12.7 Cold climate and high altitude biogas plant

A 10 cum dome plant was installed at Sorgadwari at an altitude of about 7500 ft. above sea level in Puthayan district in 1989. The gas was used for cooking and lighting. The gas production was found about 40 cf. in winter and about 80 cf. in the summer although the bottom slurry temperature in winter was 10 - 15 degree celcius only. It has proved that biogas plants could be operated at an altitude of about 7500 ft. as well.

12.8 Testing the efficiency of biogas burner

The ratio of heat utilized in raising the temperature of water in a vessel from $T_1{}^0C$ to $T_2{}^0C$ to the heat produced from combustion of biogas is known as thermal efficiencies of methane gas stoves or gas burners and can be derived by:

$$\text{Thermal efficiency} = \frac{Hu}{Hp} * 100$$

$$= \frac{Mw*Sw\,(T_2-T_1) + Ma*\,Sa\,(T_2-T_1)}{Q\,gas * Cvm * Mc\,(\%)}$$

Where,
Hu = Heat utilized in raising the temperature of water in cooking vessel from $T_1{}^0C$ to $T_2\ {}^0C$
Hp = heat produced from combustion of biogas
Mx = Heat of water used = 5000 ml

ma = Specific heat of water = 1
Sa = Specific heat of vessel (aluminium) = 0.215
T_1 = Initial temperature of water and vessel
T_2 = Final temperature of water and vessel.
Qgas = Quantity of gas consumed
Cvm = Calorific value of methane
Mc = Methane content in biogas.

The experiment showed that the percentage of efficiency of the stove was 52 in summer and 59 in winter seasons. Heat of combustion of methane = 8732.5 K. cal/ cum and volume of fraction of methane in biogas = 55 percent.

13. Institutional Development

13.1 ADB/N and Commercial Banks

In the beginning, the Agriculture Development Bank was the only institution involved in financing biogas plants. However, at present two commercial banks, Rastriaya Banijaya Bank (RBB) and Nepal Bank Limited (NBL) have also been involved in this activity. So far, ADB/N alone has financed more than 90 percent of the total investment in this sector. Nowadays, the trend of installing biogas plants on cash payment basis has been increased significantly, the basic reasons being the lengthy procedures for the loan, high interest rate (i.e.15%), bank policies and sound economic position of some of the user families.

13.2 UMN

The United Mission to Nepal was involved in research and development as well as extension and promotion of biogas technology in Nepal since 1960s. As a result, GGC was formed with their active initiation. However, later it has handed over its share to ADB/N and TCN proportionately.

13.3 Timber Corporation of Nepal / Nepal Fuel Corporation

The Nepal Fuel Corporation was one of the founder shareholders of GGC. Later it was merged to the Timber Corporation of Nepal and thus TCN is one of the present shareholders of the company.

13.4 Nepal Biogas Promotion Group and other NGOs

The Nepal Biogas Promotion Group (NBPG) was formed as an umbrella organization by biogas construction companies in 1994 for the promotion, extension, co-ordination, training and standardization of biogas technology in the country. The overall objective of NBPG is to develop and disseminate biogas as indigenous and sustainable energy sources in the country. NBPG has been involved in quality control, supplying main gas valve to the member companies and provides training to their staff. Also it facilitates the works of member companies providing supports for solving problems, if any with the banks and government offices and makes efforts to prevent unhealthy competition.

Alternative Energy Promotion and Development Foundation (AEPDF) has been established as a parallel organization to NBPG. However, its number of member companies is far less than that of NBPG. Various companies are also involved in quality control of both newly installed as well as after sales services for ensuring the smooth operation of the plant. The organization has not been proved to be effective.

Besides these, there are some other NGOs working with several organizations such as UNICEF, CARE

Nepal, Plan International, Love Green Nepal, Chure Forest Development Project, Intermediate Technology Development Group (ITDG), REDP and Parks and People Programme (PPP) initiative of UNDP.

13.5 Donor Agencies

In the past several donor agencies including USAID had supported for the research and development of biogas technology. Similarly, FAO and UNDP had extended support for the training programme and UNCDF for the development of the resources.

In most of the cases, involving rural H/Hs, the success of any programmes depends on the subsidy provided and it is no exception to biogas programme also. Subsidy is being provided for up to 10 cum digester volume capacity. At present, BSP has been monitoring for exploring funds required for providing subsidy. It is involved in technical backstopping, development of extension and promotion materials and monitoring of the programme as well. The subsidy is being provided from the contribution from KfW, a German Development Bank, Netherland Development Organisation and HMG/N. Recently a decision made at policy level has been decided the amount of subsidy would be reduced by Rs 500 per plant from the fiscal year 2001/2002.

After introduction of BSP about 71,000 biogas plants have been installed in 66 districts of the country is given in table 23.

Table 23: Biogas installation after BSP

Development Regions		Districts covered	No. of biogas installed
EDR	Terai	5	8972 (13.2%)
	Hills	11	4379 (6.4%)
CDR	Terai	7	8571 (12.6%)

	Hills	12	10458 (15.3%)
WDR	Terai	3	5786 (8.5%)
	Hills	7	21023 (30.8%)
MWDR	Terai	3	4091 (6.0%)
	Hills	7	1529 (2.2%)
FWDR	Terai	2	3310 (4.9%)
	Hills	5	78 (0.1%)
Total		66	68197 (100.0%)

Note: Figures in the parenthesis indicate the percentage.

Almost 40 percent of the plants are installed in the Western Development Region (WDR) followed by 28 percentage in the Central Development Region (CDR), about 20 percent in the Eastern Development Region (EDR), 8 percent in the Mid Western Development Region (MWDR) and 5% in the Far Western Development Region (FWDR). Thus, the technology so far has not reached to nine districts such as Humla, Jumla, Mugu, Kalikot, and Dolpa of Karnali zone, Bajhang and Bajura in Seti zone, Manang in Gandaki zone, and Mustang in Dhawalagiri zone, which are by and large sparsely populated region with colder climatic conditions.

13.6 HMG/N

The Water and Energy Commission Secretariat (WECS) of HMG/N have supported for the training programme especially in developing local masons. The Government policy regarding the development of alternative energy including biogas technology in the past has been widely criticized for being inconsistent and irregular. For the first time HMG/N provided interest free loan and subsidies to promote biogas plants was that of 1974/75. The Government had granted 6 percent interest subsidy on ADB/N loans in the following year. Subsequently, in the fiscal year 1982/83, under Intensive Rice Crop Development

Programme, The Government provided a subsidy of Rs 5,500 per biogas plant in Dhanusa, Sunsari, Rupandhei and Banke districts.

For the plants installed in the fiscal year 1984/85 and 1985/86, 50 percent interest on loan was subsidized. Similarly, for the plants installed in the year 1987/88 and 1988/89, 25 percent of the capital and 50 percent of the interest were subsidized. In the year 1989/90, 25 percent of the capital was subsidized only for the 6 and 10 cum plants. From the year, 1990/91 to 1992/93, the capital subsidy of Rs 7,000 was provided for the plants installed in the Terai and Rs 10,000 in the Hills. At present, the subsidy of Rs 6,000, Rs 9,000 and Rs 11,000 is being provided for the plants installed in the Terai and Kathmandu Valley; Hills; and remote Hills respectively. The amount will be reduced by Rs 500 on each plants from the fiscal year 2001/02.

It was in the Seventh Plan document in 1987 that a target for the installation of biogas plants was first incorporated.

The Eighth Five Year Plan (1992-97) envisaged the Government efforts in developing alternative and decentralized energy source including institutional set up for the development of alternative energy in Nepal. Similarly the Ninth Plan (1998-2003) has set a target for installation of 90,000 biogas plants during the period of the five years.

The Alternative Energy Promotion Center (AEPC) has been established in 1996. The role of AEPC is networking at central level for policy making. AEPC has been co-ordinating Biogas Co-ordination Committee (BCC) and Slurry Co-ordination Committee (SCC) meeting. It has also been involved

in quality control of biogas plants installed by various companies. A lump sum amount of Rs 500 per plant is collected by the centre for the promotion, extension, R&D activities and for providing training to the people involved in this technology.

13.7 Biogas Companies

There are altogether 49 recognized biogas construction companies in the country with 164 offices in 66 districts. These have employed more than 400 technicians and staff members. However, most of them have expressed the stand that they lack of adequate working capital. This constraint is more serious when the plants are installed on cash basis. The present construction capacity of the companies accounts to more than 25,000 biogas plants a year.

13.8 Manufacturers of Biogas appliances

With the growing number of biogas plants, more and more appliances like mixing devices, main gas pipes, water drains, gas taps, stoves, lamps need to be manufactured. About 16 manufacturers produce and supply biogas appliances at present. Either the number or the capacity of the manufacturers is to be increased for easy availability of the appliances. The following table no. 24 shows the list of recognized biogas appliances manufacturers or suppliers:

Table 24: Biogas appliances manufacturers and suppliers

SN	Manufacturer	Address / District	Recognized appliances	Colour
1	Gobar Gas Company (GGC)	Butwal, Rupandehi	Stove, water drain, gas tape, mixture machine, gas pipe, ujeli lamp	Sky blue
2	Nepal biogas Products and Engineering Services (NBGP)	Butwal, Rupandehi	Stove, water drain, gas tap, mixture machine, gas pipe, ujeli lamp	Green
3	Nil Kamal Iron Udyog (NKIU)	Bharatpur, Chitwan	Stove, water drain, gas tap, mixture machine, gas pipe	Red
4	Rastriya Gobar Gas (RGG)	Bharatpur, Chitwan	Stove, water drain, gas tap, mixture machine, gas pipe, ujeli lamp	Grey
5	Alternate Energy Works (AEW)	Pokhara, Kaski	Stove, water drain, gas tap, mixture machine, gas pipe	Orange
6	Shiva Engineering Works (SEW)	Biratnagar, Morang	Stove, water drain, gas tap, mixture machine, gas pipe	Dark blue
7	Gharelu Gobar Gas (GPC)	Butwal, Rupandehi	Stove, water drain, gas tap, mixture machine, gas pipe	Light blue
8	Gramin Gobar Gas (GGG)	Dumre, Tanahu	Stove, water drain, gas tap, mixture machine, gas pipe	Chocolate brown
9	Narayan Metal Cast Udyog (NMCU)	Butwal, Rupandehi	Stove	Brown
10	Nepal Foundry Industries (NFI)	Patan, Lalitpur	Stove	Smoke gray
11	Kapur	Butwal, Rupandehi	Water drain and gas tap	-
12	Indian stove IS8749-1988	India	Stove	-
13	Shikhar Biogas products and Industries (SBP)	Butwal, Rupandehi	Stove, water drain, gas tap, mixture machine, gas pipe, ujeli lamp	Pink
14	Prabhat Engineering and Foundry Works (PEW)	Butwal, Rupandehi	Stove, water drain, gas tap	Yellow
15	VSH ball valve	The Netherlands	Main gas valve	-
16	FF ball valve	Italy	Main gas valve	-

Thus at present, there are 13 local and three international suppliers provide appliances to the biogas installation companies. Each suppliers/ manufacturers are recognized for particular appliances and instructed to use fixed colours to be enable to identify the manufacturers in case these are defective.

14. Services provided by Biogas Companies

The GGC was the only recognized Biogas Company until F/Y 1992/93. After implementation of BSP in 1992, this number increased gradually to 49 today. Most of these were established by ex-employees of the parent organization, the GGC. These companies have been providing services on the following issues.

i. Guarantee of the plant

At the beginning of the programme, GGC was providing 20 years guarantee for the plants it installed. Later it was reduced to 7 years as the bank was providing loan for seven years. Nowadays, all companies are providing a guarantee for three years on the structural part of the plants such as dome, digester, inlet, outlet, turret and water drain pit and one year guarantee on appliances and fitting works. A sum of Rs 600 is charged to cover a guarantee fee and the cost of visit to be made by the respective company officials on request of the concerned users/owners of the plants.

ii. Quality management

The company technicians have to visit each biogas plant once a year starting six months after completion of the installation. BSP has devised 73 parameters for ensuring the quality of plant construction and its proper functioning. These parameters are grouped into four categories such as penalty equal to subsidy, penalty from Rs 10 to 700, no action and providing bonus to companies.

All of the recognized biogas companies together have installed biogas plants in 66 districts of the country. The most potential districts for biogas installation are

Jhapa, Morang, Siraha, Dhanusa, Sarlahi, Sindhuli, Khotang, Dhading, Chitwan Syangja, Gulmi, Rupandehi and Kaski.

It has been felt that local organizations and I/NGOs could play an important role in mobilizing the demand for biogas installation. REDP and PPP of UNDP have also been involved in the promotion of the technology. So far no proper strategies have been made effective for marketing the technology.

Similarly, GGC and other line agencies were involved in the following R&D activities:

- Changes in the design of biogas plants;
- Development of biogas appliances such as mixture machine, gas tap, valve, water drain, stove, gas meter, manometer, pressure gauze etc.;
- Trouble shooting of biogas plants;
- Various studies on the survey of biogas plants;
- Gas production measurement for various feeding materials;
- Utilization of various alternative feed stocks besides gobar;
- Increasing gas production in winter months;
- Proper utilization of digested dung;
- Biogas for commercial utilization;
- Testing of appliances;
- Measurement of retention time;
- Glassfibre for dome construction;
- Documentation of the activities;
- Improvement of gas lamps;
- Quality control of the plants; and
- Measurement of gas production at high altitude.

iii. Training

Most of the companies have been providing training to users, local masons, potential clients as well as to the staff members.

iv. Promotion through Publications

Some of the companies, especially GGC, BSP and AEPC have published and documented several publications such as biogas bulletins, annual progress reports, research reports and so on.

These have been giving priority for publishing their activities in the form of reports. They have published and distributed monthly biogas bulletins, progress reports, study reports, research reports and so on. The newsletters cover information regarding concept, activities and accomplishment of the programme. These have also developed local mason training video. These video documentaries are shown to different audiences on request.

These organisations have produced the following publications and reports.

- Biogas Bulletin for several months;
- Progress reports for various years;
- Various Research reports;
- Operation and maintenance booklet; and
- Video film for construction and promotion of biogas plants.

v. Environmental sanitation

It has been estimated that the national biogas programme has helped to reduce 4,896 MT of carbon production annually assuming that a total of 33,960 MT of firewood is saved annually (1MT of firewood spread saves about 0.25 MT of carbon production). Similarly it is calculated that installation of toilet attached biogas plants in the programme districts have saved about 869,000 trees of soft wood species per annum. This is a big boost for green cover. This estimation is based on the calculation that about three MT of firewood could be derived from one tree.

Temporary as well as permanent toilets installed in the programme VDCs have helped in improving the environmental sanitation of the area. Similarly construction of compost pits has helped to improve the environment in the programme areas.

After the implementation of national biogas programme, the drudgery reduction was noticed in the programme VDCs. Moreover, the clean energy technology has greatly improved the health, education and social status of the people, especially of women in the programme VDCs.

15. Reasons for the Success of Biogas Programme

This programme has become successful because of the close co-operation of the concerned government agencies, companies, banks and donor agencies. In order to generate better impact of the programme, it should start with planning from the National Planning Commission (NPC) and the Ministry of Finance (MoF)

for setting targets for the plants construction and stable policy providing subsidy. This is required for mobilising and co-ordinating the funds and the banks activities for better utilisation of the national and international resources available for biogas. Similarly, a linkage has to be developed with agriculture, energy, forest and other concerned sectors for increasing the demands for biogas installation and capacity building of the companies/agencies for the purpose.

The following factors contributed to the successful implementation of biogas programme in Nepal:

- Introduction of well proven design and appliances after several years of research and development, experience;
- Promotional and awareness activities have been carried out at different levels;
- Financial studies/ analysis have been concluded and as a result subsidies have being provided continuously through the local banks in case of the plants installed on loan, and through BSP in case of the plants installed on cash payment basis;
- Technical capabilities have been properly examined and local masons have been trained;
- Several companies were recognised for the installation as well as supply of biogas plants and the accessories. Quality control visits have been provisioned with a view to maintain the standards of the plants;
- A good organisational networking has been achieved through the Biogas and Slurry Co-ordination Committees;
- With the connection and use of toilets to the biogas plants and through saving on firewood and kerosene, a significant improvement in health and environment has been noticed;
- Slurry Extension Programme (SEP II) has been introduced to increase the effective markets for biogas

plants by maximising the benefits of operating biogas plants through improved use of slurry in crop production also has indirectly contributed in reducing the workload, especially of rural women and girls;

- The NBPG, an association of all biogas companies has been formed for the promotion and extension of biogas plants. Similarly, AEPC has been established with the initiation of the Government;
- Quality management measures of the plants has been introduced;
- Generation of employment in the rural areas has been enhanced.

It has also been supported with the clear responsibility of each and every organisation involved in this technology. Some of other factors that made important impact to ensure the success of this programme are:

- Availability of both loan and subsidy funds for certain period of time;
- Privatisation of biogas companies and the commercial banks;
- Awareness promotion activities conducted on timely basis; and
- Proper assessment of technical capacities.

16. Conclusions

The Gobar Gas tatha Krishi Yantra Vikash Pvt. Ltd. with the active support of the Agriculture Development Bank and the United Mission to Nepal is the pioneering organisation for the development and dissemination of biogas technology in Nepal. The Alternative Energy Promotion Centre and Biogas Support Programme have further supported in this endeavour. As a result, about 50 biogas plant installation companies have been established.

Biogas is used mostly for cooking and the lighting and the slurry as bio-fertilizer. Majority of the rural energy technology users live in the area, where the dependency on the forest for firewood and fodder is normally high. It has been estimated that with the efforts of the national biogas programme, about 869,000 living soft trees of various specious are saved after the installation of about 80,000 biogas plants in the country.

During the period between 1981 and 1986, GGC had developed andtested various designs of biogas plants including the floating drum design, fixed dome design, tunnel design, and plastic bag biodigester. Similarly, various designs of biogas appliances such as the gas pipes, mixture machines, gas taps, stoves, lamps, water drains, gas meter, templates and agitators were developed, modified and tested. On the other hand, experiments on various alternative feed stocks such as *Eupatorium* species, water hyacinth, night soil and rice straw were carried out. Slurry coming from the plants was applied to various crops both vegetables and cereals. It was also used for feeding fish and animals. However, most of the researches on the subject were limited to experiments and reports.

Research was also conducted on the application of gas for running engines for agro-processing, pumping water for irrigation and generating electricity especially on community basis. Until 1986, Gobar Gas Company (GGC) had installed 60 such plants. However, due to some social problems most of those have not been functioning these days.

Toilet attached biogas plant is an appropriate alternative technology in order to reduce the pressure on the forests and maintain clean and healthy environment. These have improved quality of indoor air and thus the health of members of the user households have been found better resulting in the reduction in medical expenses, drudgery

and health hazard of the rural people. However, the extent of betterment could not be assessed or measured.

This book outlines the main accomplishments such as: achievements and challenges of the programme including the Government policy, economic analysis of the plant, quality management of the system, and institutional development. It has also focused on basic principle for the installation of the plants, services provided by the company and the reasons of the success of the programme. BSP's involvement in human resource development was a great success. Similarly, the concept of local mason was introduced by GGC and training was provided slightly over 600 local people, most of them have been working in 49 biogas construction companies.

Several organisations including ADB/N, UMN, TCN, USAID, UNCDF, and WECS have provided valuable support in the research and development, extension, promotion, dissemination and human resource development of the companies.

Although, the clean energy technology has improved the sanitation of the local environment, the poorest of the poor have not been able to gain directly from the programme. It has been mentioned in several study reports that after installation of biogas plants, the user families have utilised their time saved because of the plants, in goat raising, poultry farming, agricultural production, and childcare, thus enhancing their livelihood and quality of life. It has been estimated that the proper use of slurry from the plants would increase agricultural production at the level of 10 – 15 percent.

17. Annexes

Annex 1: Drawing of latrine connection to biogas plants

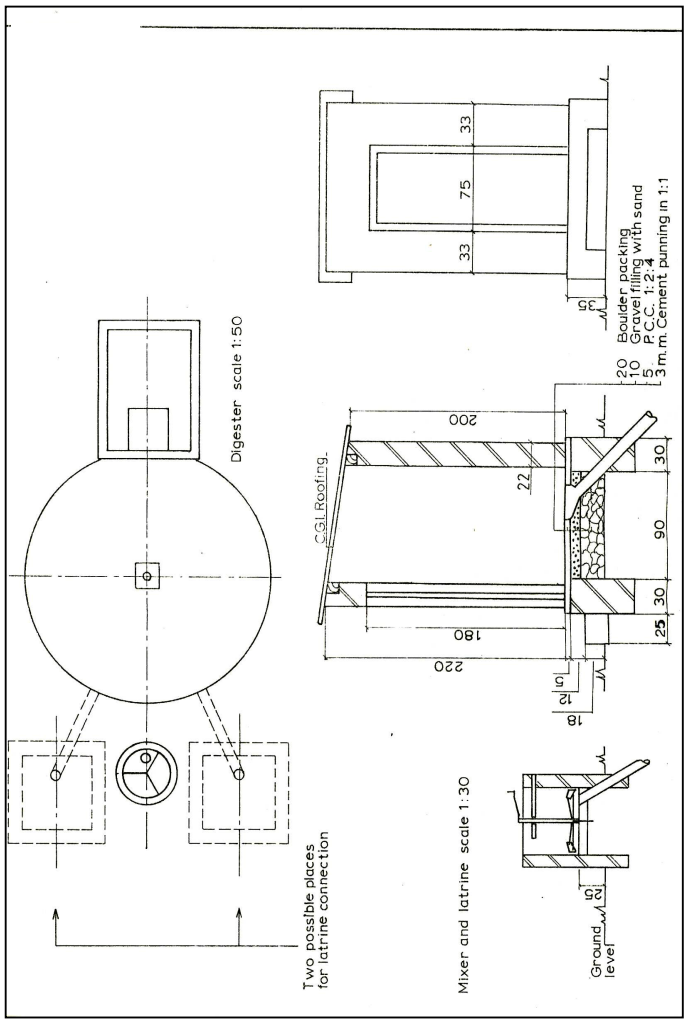

Source : GGC

Annex 2: Drawing of Carburettor

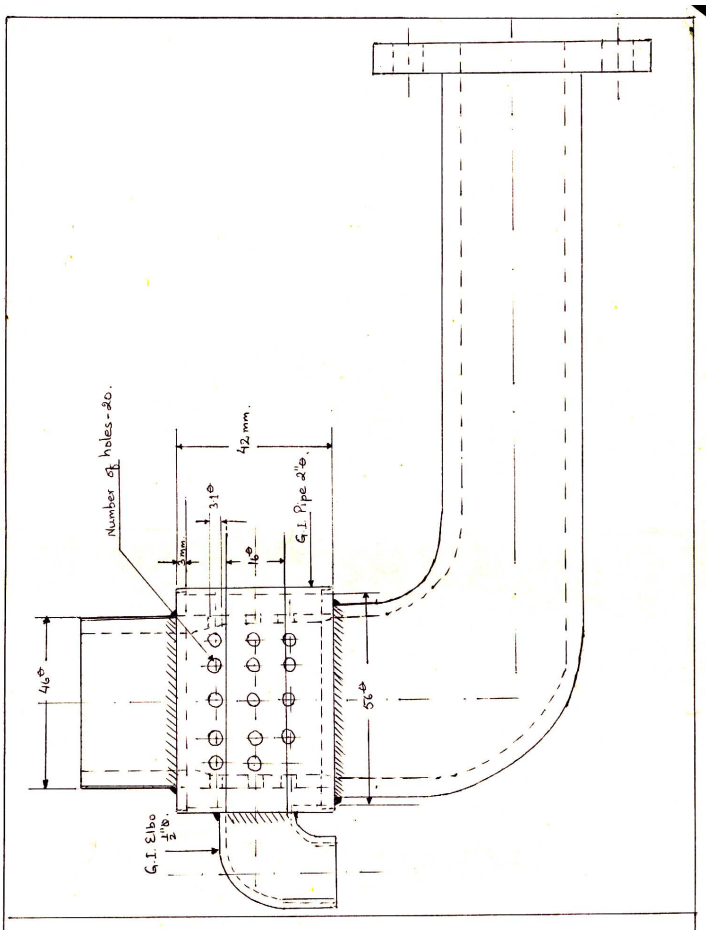

Source : GGC

***Annex 3** (a) : Biogas mill installation planning*

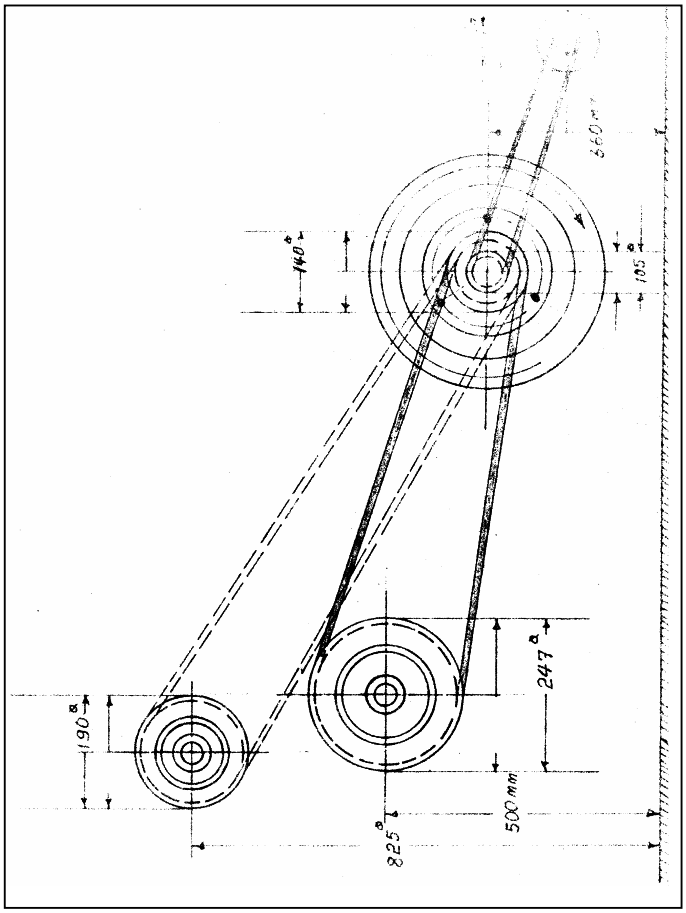

Source : GGC

***Annex 3** (b) : Biogas mill installation planning*

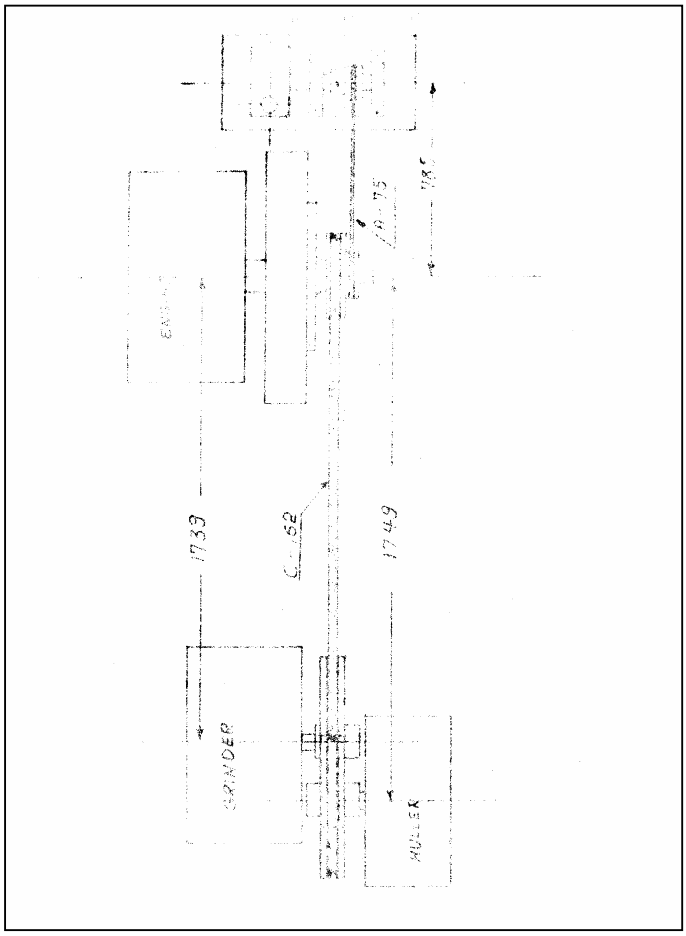

Source : GGC

Annex 4: Drawing of 50 cum stretched dome plant

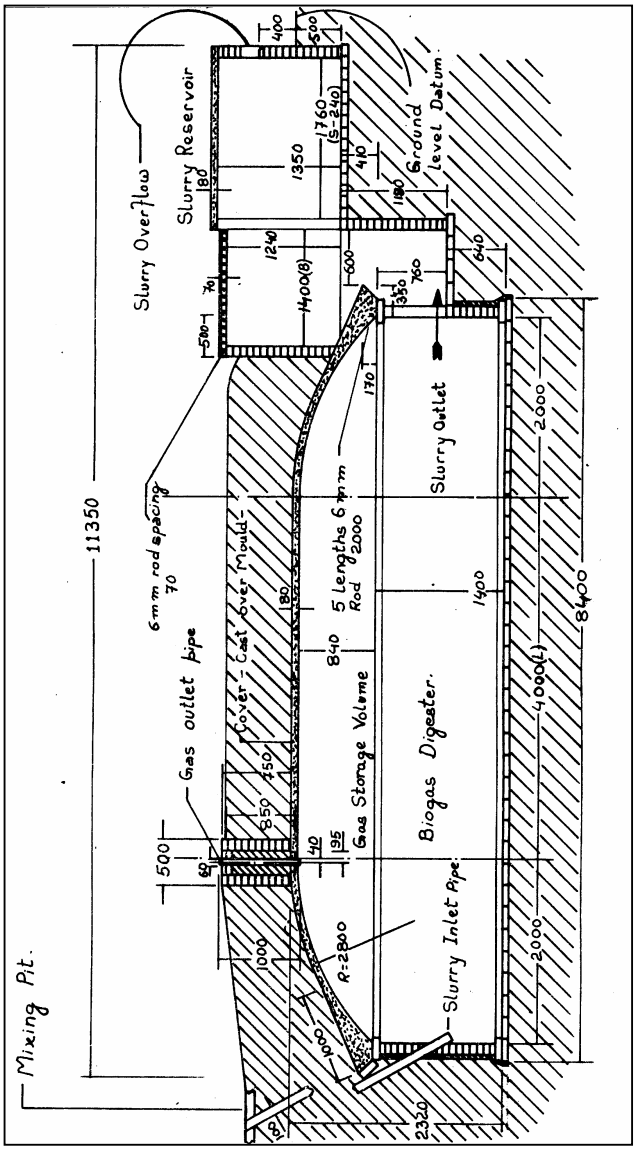

Source : GGC

Annex 5: Drawings of 75 cum stretched dome plant

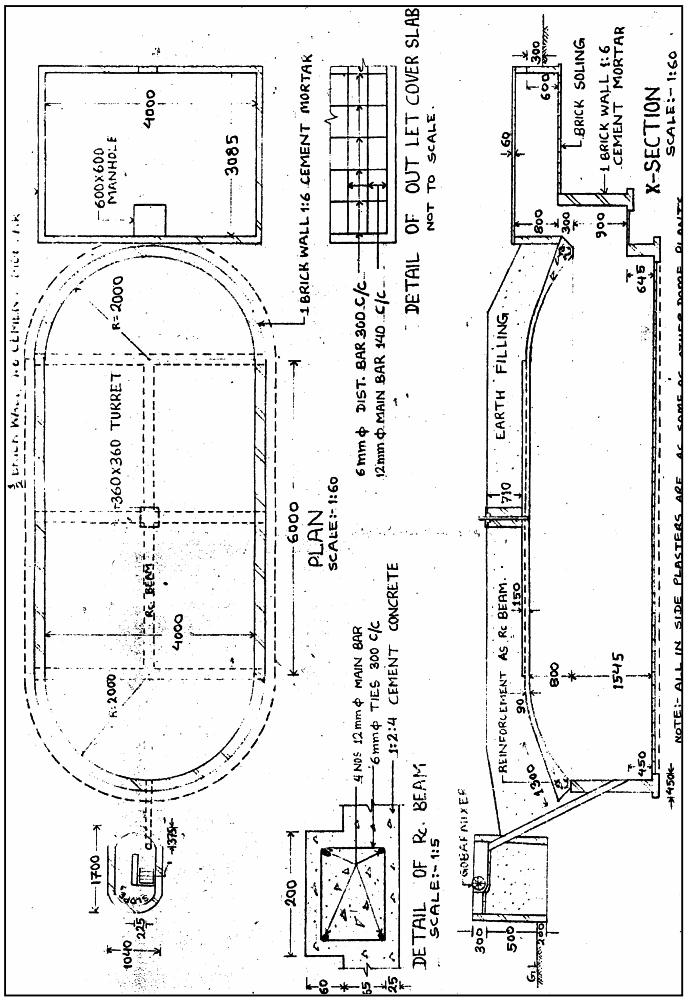

Source : GGC

Annex 6: Drawings of 100 cum stretched dome plant

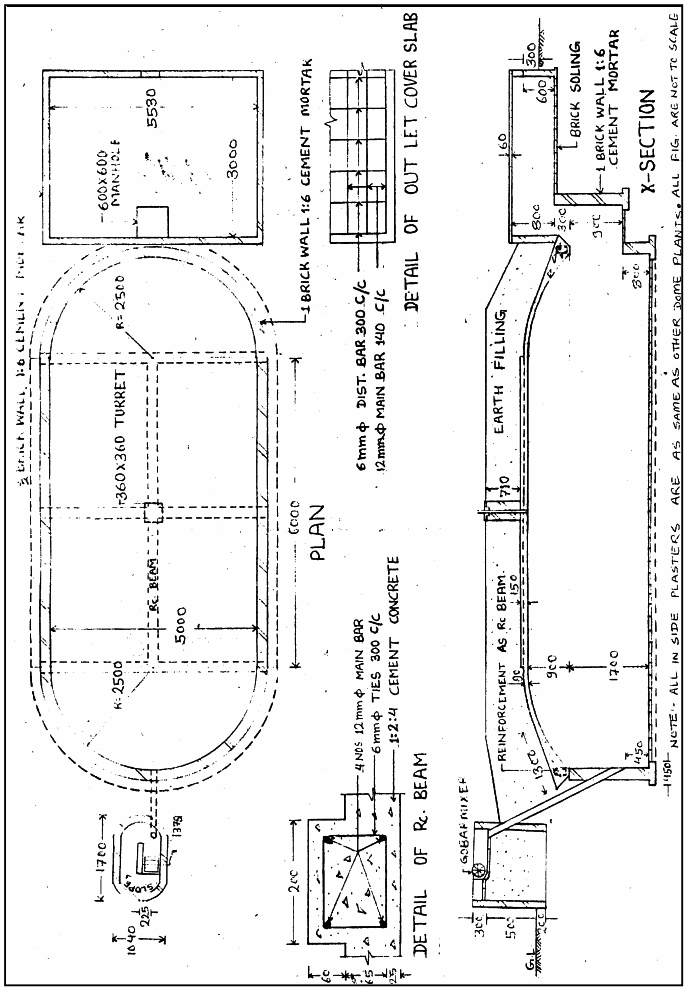

Source : GGC

Annex 7: Drawing of Janatamodel & Danbandhu biogas plants (India)

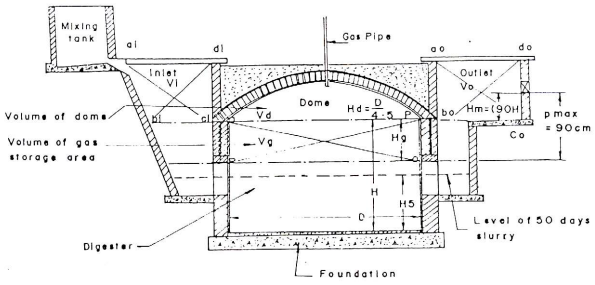

JANATA MODEL BIO-GAS PLANT

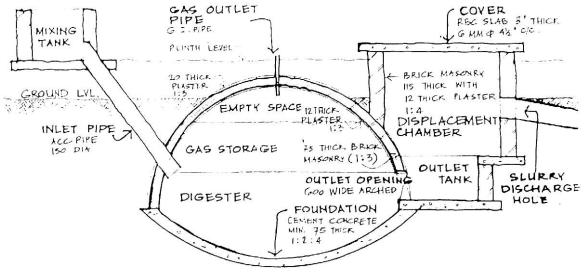

Components of Deenbandhu biogas plant

Source : TERI/AFPRO

Annex 8: Drawing of Chinese and KVIC model biogas plants

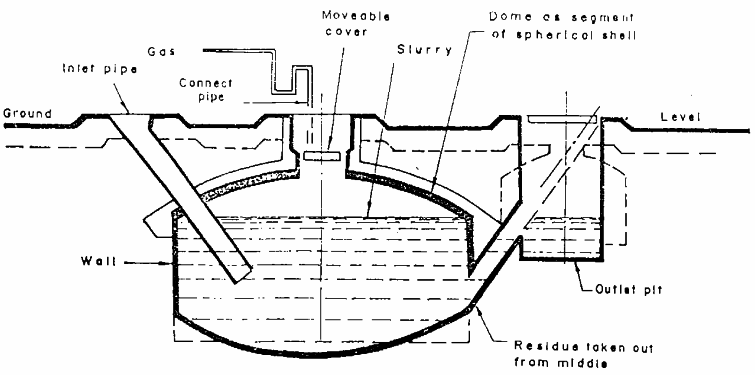

CHINESE BIOGAS PLANT

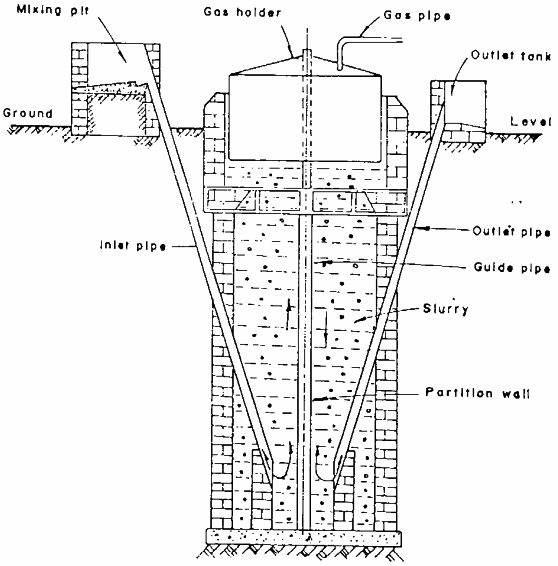

KVIC MODEL (India)

18. References

1. Annual Progress Report of GGC, 1992/93 and 1993/94.
2. Annual Report of Research Unit, GGC, 1990/91, 1991/92, 1992/93.
3. Bigyan Lekh Mala, RONAST, Kathmandu, various publications from 1986 - 1993.
4. Biogas Forum, BORDA, Germany, various publications from 1987 - 1993.
5. Biogas Newsletter, Kathmandu, various publications from 1986 - 1993.
6. Biogas Support Programme, Plan of Activities, 1998/99, May 1998.
7. Community Mobilisation Guidelines, Rural Energy Development Programme, Lalitpur, 1998.
8. DDC: REDS Kavre, A Case study on toilet attached biogas at Nayagaun VDC of Kavre, August 2000.
9. DDC: REDS Tanahun, Impact of biogas plant in rural livelihood.
10. Devkota Govinda Prasad - Biogas Technology in Nepal: An Overview of its Sustainable Development, A paper presented at the International Workshop on the Design, Performance and Marketability of Biogas System, Sri Lanka, May 9-13 1999.
11. Devkota Govinda Prasad - Commercialisation of Biogas in Nepal, NBPG, August 1998.
12. Devkota Govinda Prasad - National Biogas Programme: Reasons of its success in Nepal, III National Conference on Science and Technology, organised by RONAST, Kathmandu, Nepal, March 8-11, 1999
13. Devkota Govinda Prasad - Potential and Problems of Bioenergy in Nepal, An International Conference on Empowerment for Quality of Life and Environment, Health, Hygiene and Sanitation in Nepal jointly organised by Susma Koirala Memorial Trust and Sulab International, Kathmandu, June 1998.
14. Devkota Govinda Prasad - Compilation of Research papers, Reports, Seminar papers and Articles published in various national and international journals, magazines, proceedings, newsletter and bulletins, 1998.

15. Fulford David - Running a Biogas Programme: Handbook of IT Publication, 1988.
16. HMG/N WECS, Alternative Energy Technology - An Overview and Assessment, 1994/95, Kathmandu, Nepal.
17. HMG/N, SNV/Nepal- Biogas Support Programme - Phase III, 1996.
18. JB Singh, Raymond Myles, Anil Dhussa - Manual on Deenbandhu Biogas Plant, AFPRO, New Delhi, 1993
19. Mason Report, GGC, 1991/92, 1992
20. O. P. Chawala- Advances in Biogas Technology, India Council of Agricultural Research, New Delhi 1984.
21. Rural Energy Development Programme, Impact Study of The Sustainable Rural Energy Development Programme, December 2000.
22. Soma Dutta, Ibrahim Rehman, Preeti and Venkata Ramana, Biogas the Indian Experience, Tata Energy Research Institute, New Delhi, 1997.
23. Survey 1990/91 on GGC Biogas Plants, GGC, April 1994.
24. United Mission to Nepal: Biogas Challenges and experience from Nepal, Vol. 1 and 2, 1985.
25. Van Nes Wim J - Technical Biogas Potential per District in Nepal, Biogas Research Unit, Butwal, 1992.

ABOUT THE AUTHOR

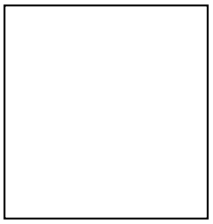

NAME	DEVKOTA, Govinda Prasad
HOME ADDRESS	Luitel, Ukhubari, Ward No.1, Mirkot VDC Gorkha.
PRESENT ADDRESS	Maypee, Kathmandu Phone No. 01-351140, 356219.
OFFICE ADDRESS	Universal Consultancy Services (P) Ltd Executive Chairman Balaju, Banasthali P.O. Box 20506, Kathmandu Phone No. 01-350580, E-mail: ucs@mail.com.np
EDUCATION	Post Graduate Diploma in Environmental Science and Technology, IHE, the Netherlands, 1990-1991 Master of Arts (M.A.), Economics, 1985, Tribhuvan University, Kathmandu, Nepal, Bachelor of Science (B.Sc.), Botany, 1977.Tribhuvan University, Nepal
TRAINING	Sixth UNDP-FAO-China International Biogas Training Course (9th March to 19th April 1987), Chengdu, China Commitment in Action (Management and Leadership Development) organised by UMN and Exectech. Inc. USA, 25th June to 1st Dec. 1993. Computer software courses (Windows Packages) Institutional Development at Grassroots levels (21 April-5 May 1997) in Pakistan
PUBLICATIONS	Biogas Technology in Nepal: A Sustainable Source of Enegy for Rural People. Slightly over 60 articles, reports, seminar papers on biogas, microhydro, environment and enterprise development published in various national and international journals, magazines and seminar proceedings.
SEMINAR AND WORKSHOP ATTENDED	Attended more than a dozen of national and international workshop and seminars and presented paper in every seminar
AWARDS	Deependra Science and Technology Youth Prize 1985, from RONAST (First time recipient)
COUNTRIES VISITED	Nepal (about 50 districts) India, Pakistan, Thailand, Hong Kong, China, Germany, The Philippines, The Netherlands, France, UK, Belgium, Switzerland and Sri Lanka.